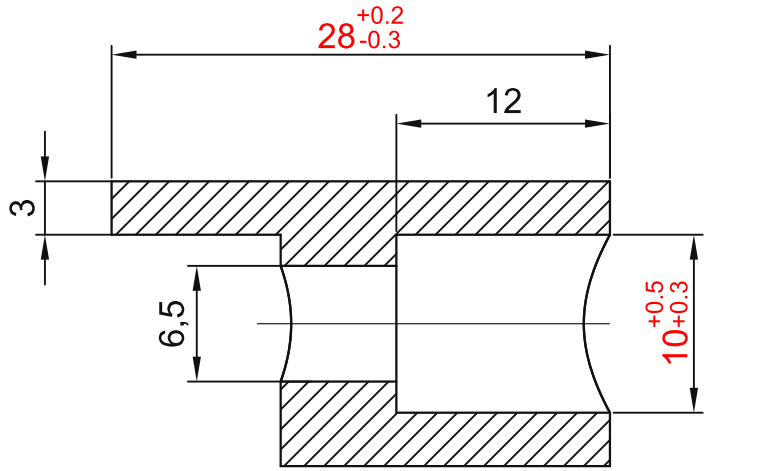



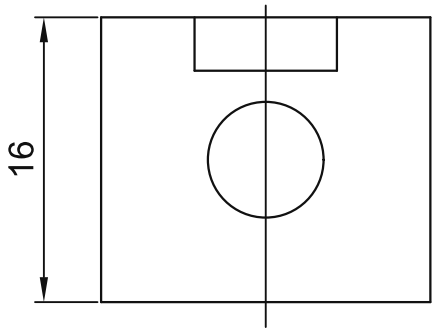

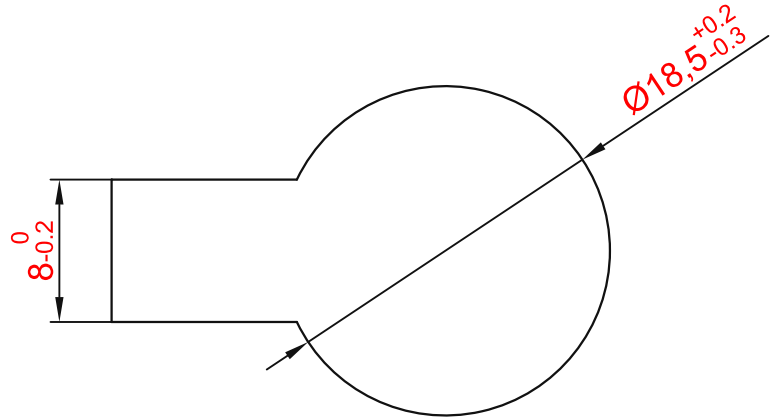

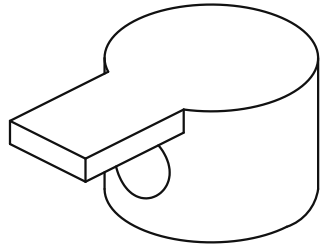

TECHNICAL NOTES:
1. Unspecified dimensional tolerances: IT10.
2. No burrs, shrinkage or obvious mould marks.
3. No surface impact damage or scratches.
4. Grind and sandblast the surface.
5. Product mass: 25.5 g/pc.

sinsdar

ANCHOR FASTENER CAMS

DRAWING / PART NUMBER
XADJ31-408-D6.5

MATERIAL: SUS304

UNIT: mm SCALE: see dimensions SHEET: 1 / 1