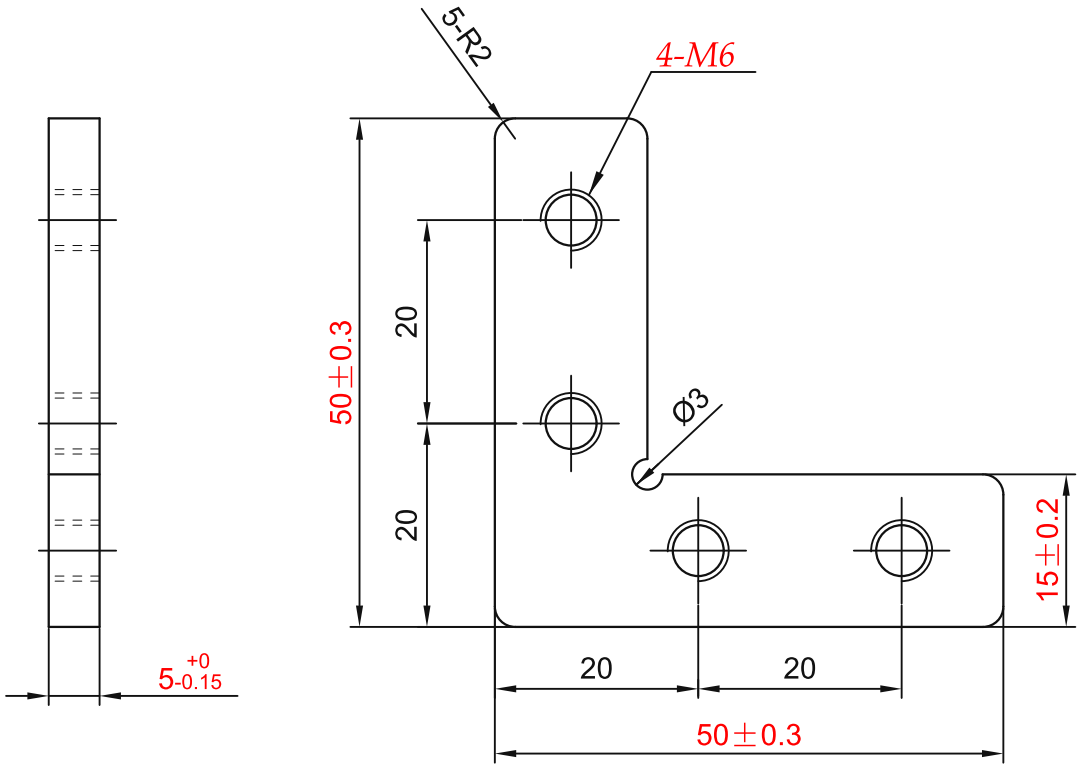

TECHNICAL NOTES:
1. Applicable tolerance standard: GB/T1804-2000, class M.
2. Remove burrs and break sharp edges. No surface scratches, impact damage or spots.
3. Brush one face. Threads must run freely.

sinsdar

INTERIOR CORNER BRACKETS

DRAWING / PART NUMBER
XADN31-4010-K15

MATERIAL: SUS304

UNIT: mm SCALE: see dimensions SHEET: 1 / 1