

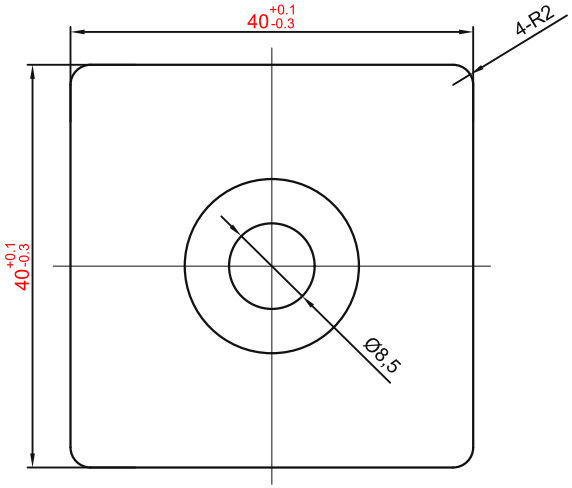

TECHNICAL NOTES:
1. Unspecified dimensional tolerances: +/-0.3.
2. Remove burrs and break sharp edges. No scratches, impact damage or spots.
3. Finish: 03 black anodizing.

sinsdar

ALUMINUM END CAPS

DRAWING / PART NUMBER

XARC03-408-4040

MATERIAL: A6063-T5

UNIT: mm SCALE: see dimensions SHEET: 1 / 1