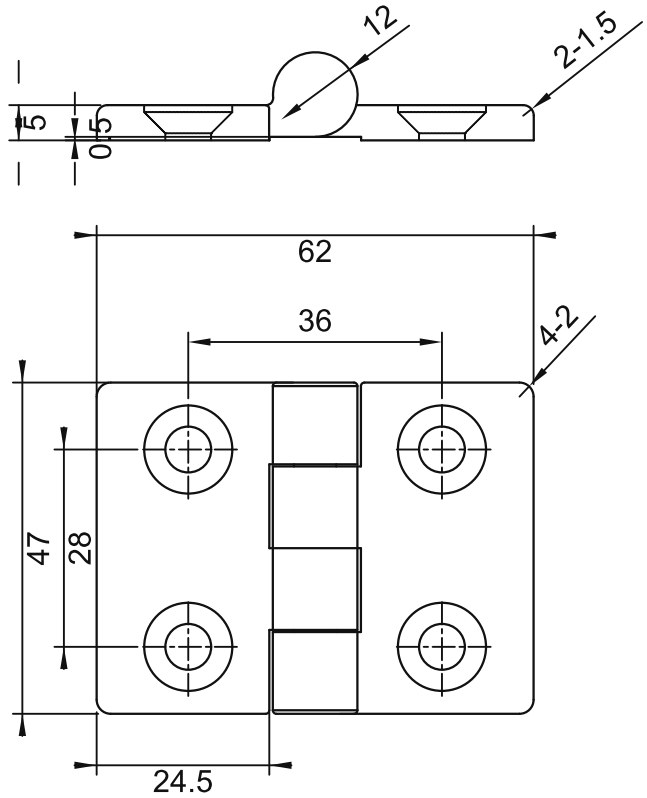

4-Ø6.5 THRU / Ø12.5 x 90° CSK

TECHNICAL NOTES:
1. Material: SUS316.
2. Surface finish: Polished.
3. Verify mating holes and clearance.
4. Manufacturing tolerances are not specified in the reviewed official catalogue.

sinsdar

STAINLESS STEEL HINGES

DRAWING / PART NUMBER
XAKQ31-G-Z-6247

MATERIAL: SUS316

UNIT: mm SCALE: see dimensions SHEET: 1 / 1