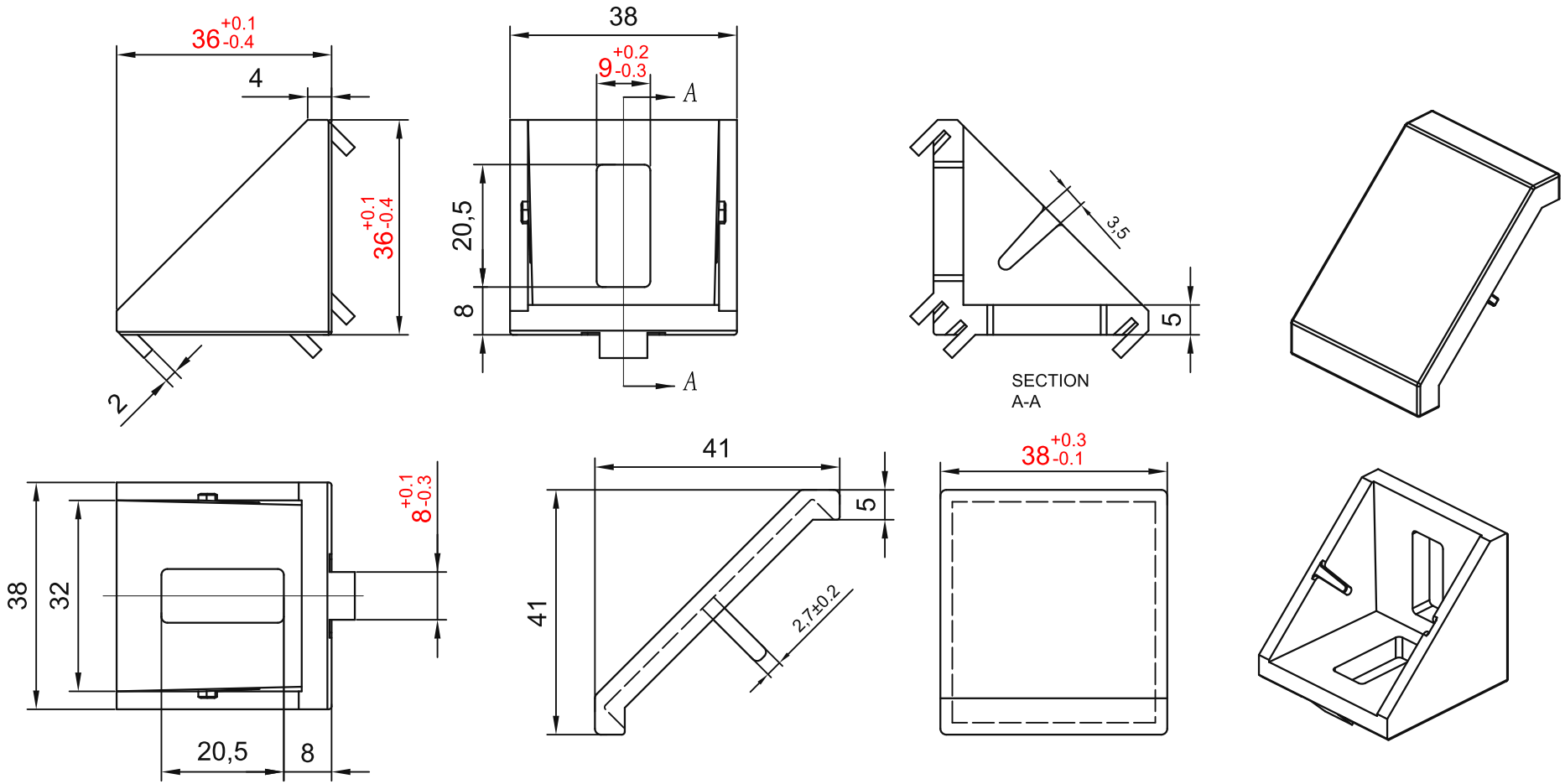

TECHNICAL NOTES:
1. Dimensions are in mm.
2. Body surface finish: Vibratory polished.
3. Verify mounting holes and mating profile slot dimensions.

sinsdar

DIE-CAST CORNER BRACKETS

DRAWING / PART NUMBER
XABB11-G408-4040G

MATERIAL: ADC12

UNIT: mm SCALE: see dimensions SHEET: 1 / 1