MATING PROFILE
AOB02-H9090Y
AOB02-H9090YC
AOB05-9090

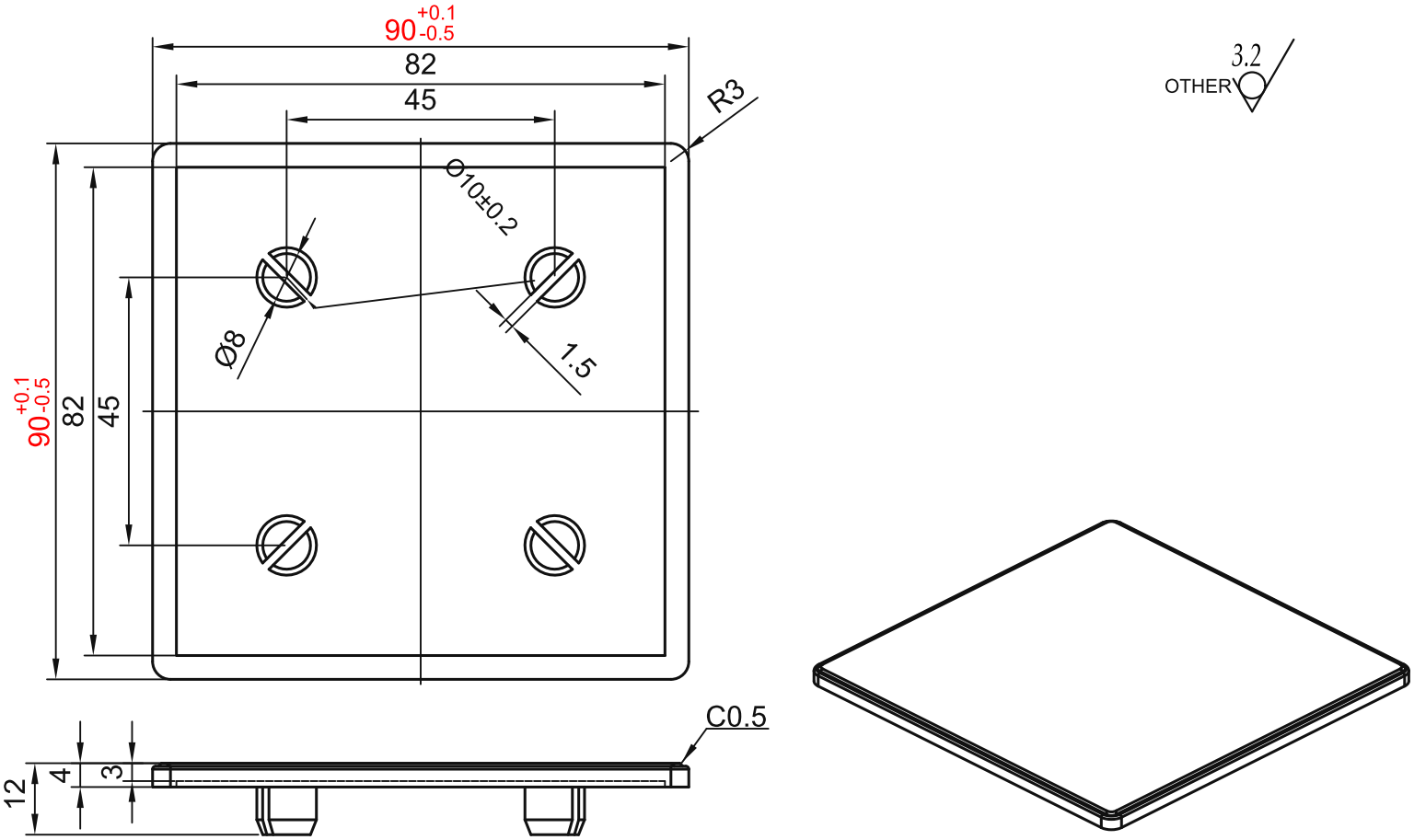

TECHNICAL NOTES:
1. Unspecified dimensional tolerances: IT12.
2. Unspecified fillets/chamfers: R/C0.5.
3. Remove burrs; no shrinkage or flow marks.

COLOR / VARIANT:
XARC51-4510-9090: Light gray (similar to RAL 7038).
XARC52-4510-9090: Black.

sinsdar

PLASTIC END CAPS

DRAWING / PART NUMBER
XARC51-4510-9090 / XARC52-4510-9090

MATERIAL: PA

UNIT: mm SCALE: see dimensions SHEET: 1 / 1