MATING PROFILE
AOB02-H2040
AOB05-2040

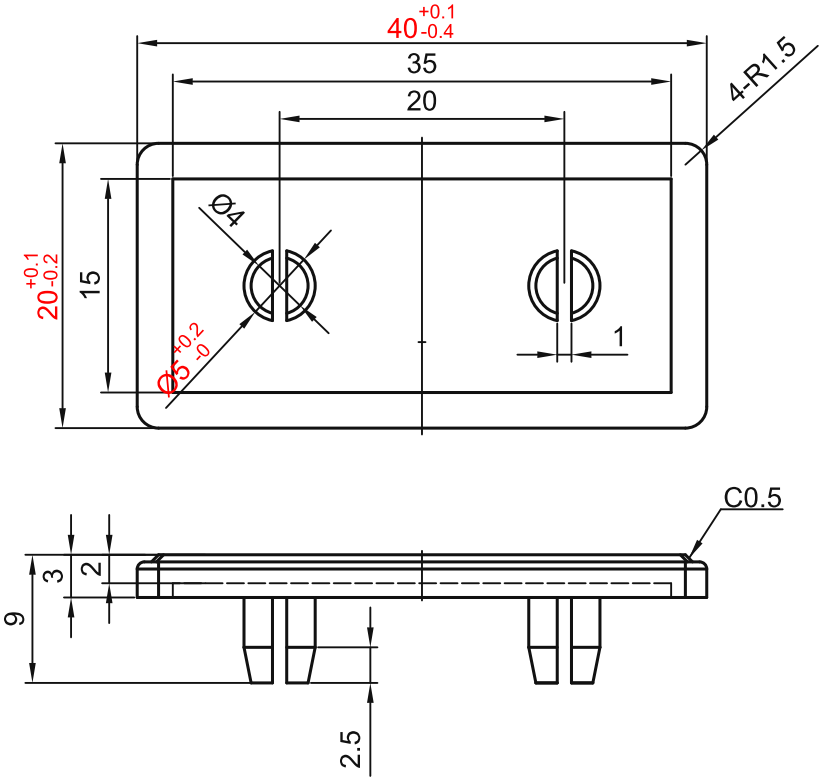

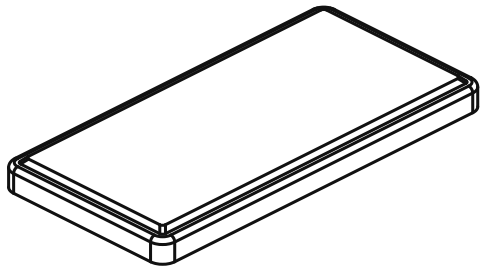

3.2
OTHER

TECHNICAL NOTES:
1. Unspecified dimensional tolerances: +/-0.3 mm.
2. Unspecified fillets/chamfers: R/C0.5.
3. Remove burrs; no shrinkage or flow marks.

COLOR / VARIANT:
XARC51-206-2040: Light gray (similar to RAL 7038).
XARC52-206-2040: Black.

sinsdar

PLASTIC END CAPS

DRAWING / PART NUMBER
XARC51-206-2040 / XARC52-206-2040

MATERIAL: PA

UNIT: mm SCALE: see dimensions SHEET: 1 / 1