BODY: ADC12

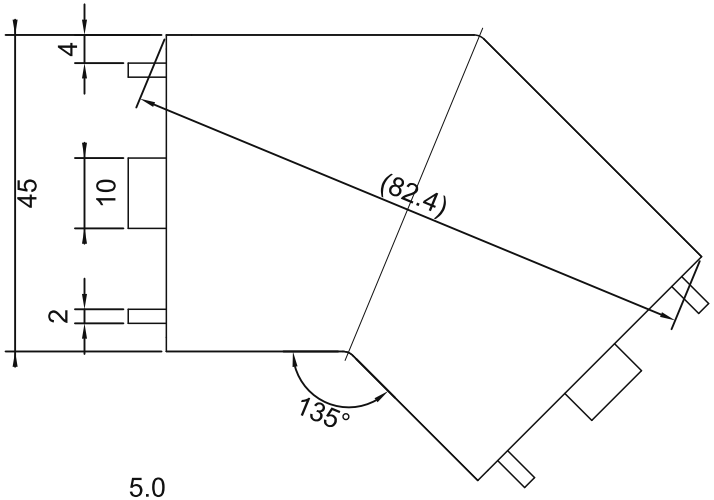

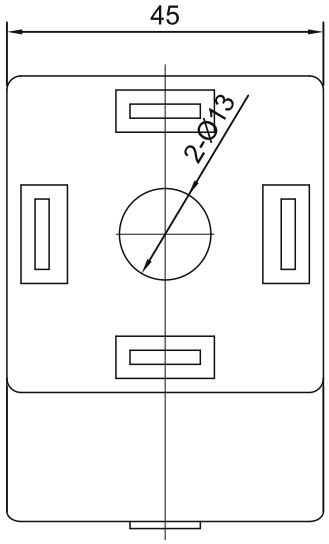

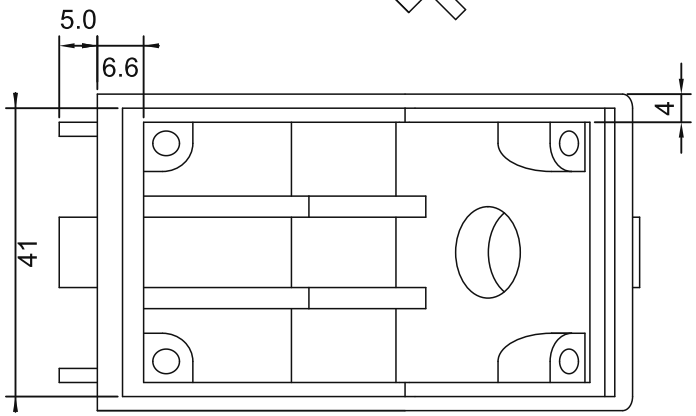

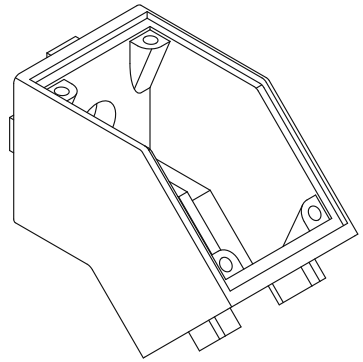

TECHNICAL NOTES:
3. No burrs, scratches or flow marks; smooth surface.
4. Source application: 4545 profiles; verify mating dimensions.
5. Surface finish: painted.
Target nominal dimensions; manufacturing tolerances not specified in reviewed catalogue.

sinsdar

135 DEGREE CONNECTOR - BODY

DRAWING / PART NUMBER
XADE11-4510

MATERIAL: ADC12
UNIT: mm SCALE: see dimensions SHEET: 1 / 1