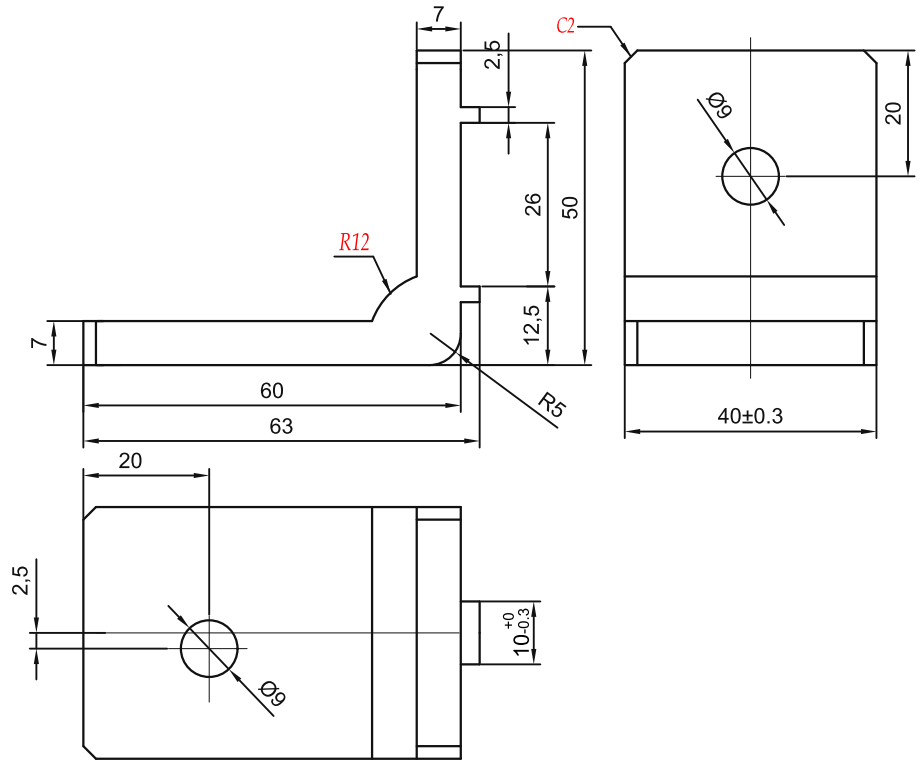

TECHNICAL NOTES:
1. Unspecified dimensional tolerances: +/-0.3 mm.
2. Remove burrs and break sharp edges. No scratches, impact damage or spots.
3. Sandblast and anodize the surface.

sinsdar	SAFETY FENCE BRACKETS
DRAWING / PART NUMBER	XAVB01-40L
MATERIAL: A6063-T5	
UNIT: mm SCALE: see dimensions SHEET: 1 / 1	