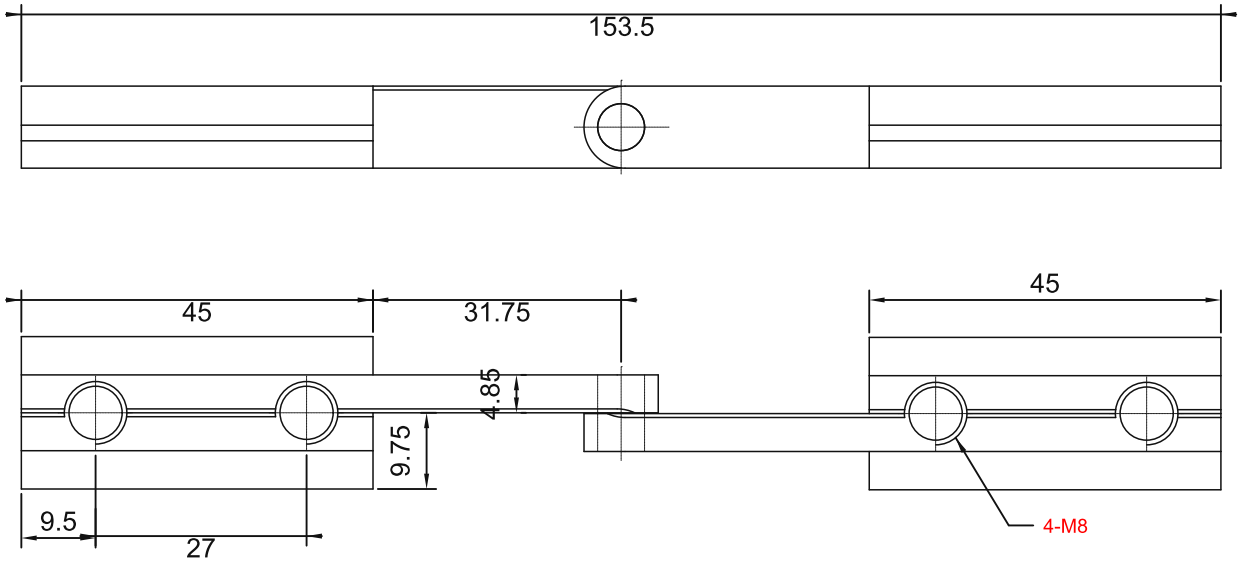

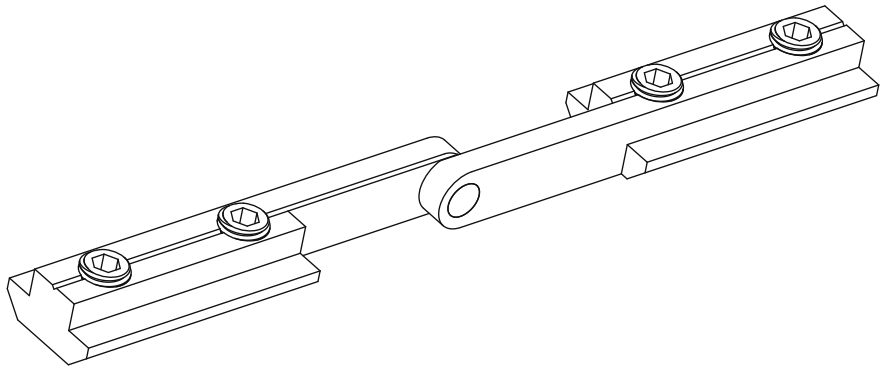

TECHNICAL NOTES:
1. No burrs, rust or plating defects.
2. Unspecified tolerances: GB/T 1804-2000, class M.
3. Unspecified edge radii: R0.3.
4. Pre-install four M8-L12 set screws.

sinsdar

VARIABLE ANGLE PROFILE CONNECTORS

DRAWING / PART NUMBER
XADP21-4010-X

MATERIAL: Carbon steel

UNIT: mm SCALE: see dimensions SHEET: 1 / 1