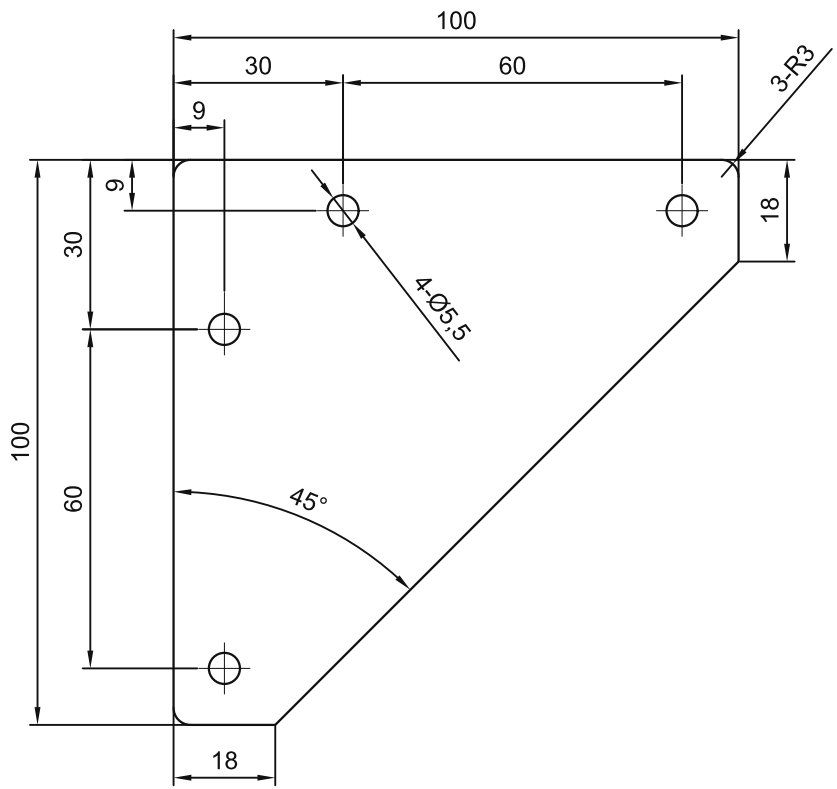

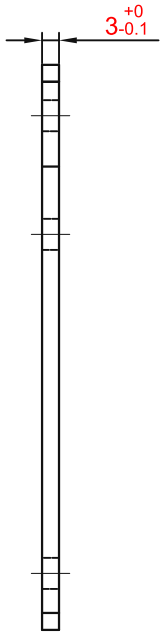

6.3
OTHER

TECHNICAL NOTES:
1. Unspecified dimensional tolerances: +/-0.3.
2. Remove burrs and break sharp edges. No surface scratches, impact damage or spots.
3. Brush one product face.
4. Product mass: 157 g.

sinsdar

JOINING PLATES

DRAWING / PART NUMBER
XACC31-206-A-2020

MATERIAL: SUS304

UNIT: mm SCALE: see dimensions SHEET: 1 / 1