OTHER

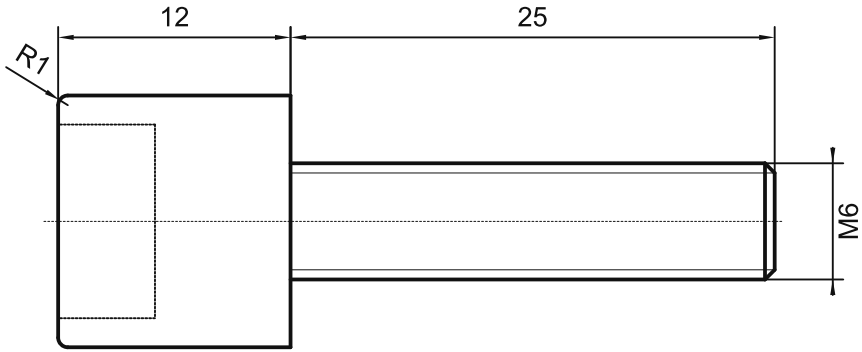

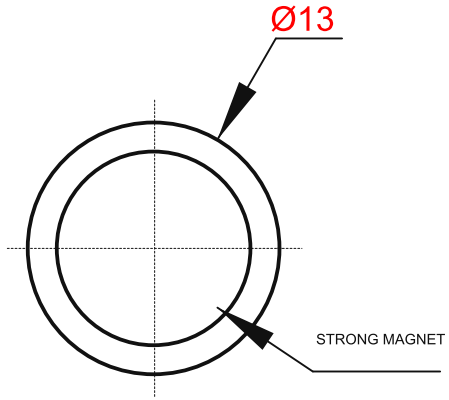

TECHNICAL NOTES:
1. Unspecified dimensional tolerances: +/-0.3.
2. Nickel-plate the surface; break sharp edges and deburr.
3. Magnet must not protrude above the product surface;
recess below the product surface: 0.05-0.35 mm.

sinsdar

DOOR STOPPERS

DRAWING / PART NUMBER
XAKC22-T-LZ

MATERIAL: Carbon steel
UNIT: mm SCALE: see dimensions SHEET: 1 / 1