| MATING PROFILE |
| --- |
| AOB02-H4590Y |
| AOB02-H4590YC |
| AOB05-4590YC |
| AOB05-4590 |
| AOB05-4590C |

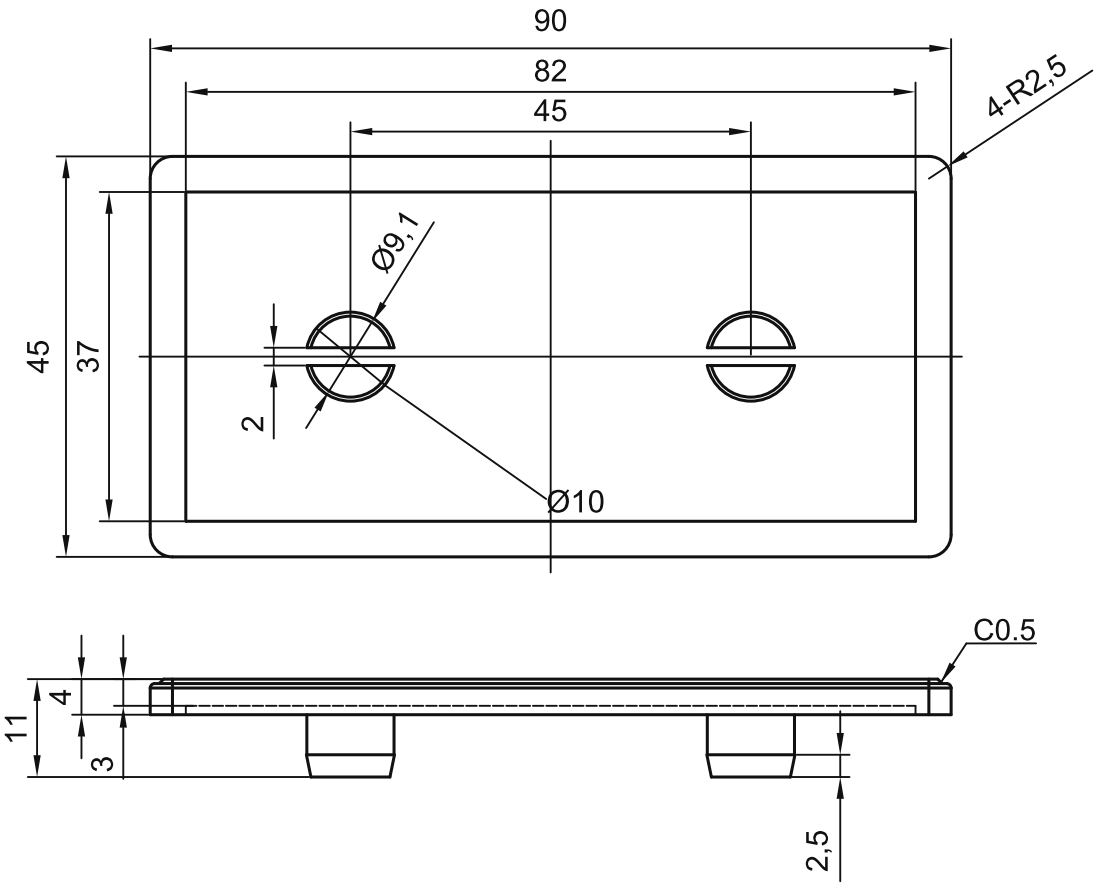


TECHNICAL NOTES:
3. Remove burrs; no shrinkage or flow marks.

Target nominal dimensions; manufacturing tolerances not specified in reviewed catalogue.

sinsdar

PLASTIC END CAPS

DRAWING / PART NUMBER
XARC51-4510-4590 / XARC52-4510-4590

MATERIAL: PA (51: light grey; 52: black)
UNIT: mm SCALE: see dimensions SHEET: 1 / 1