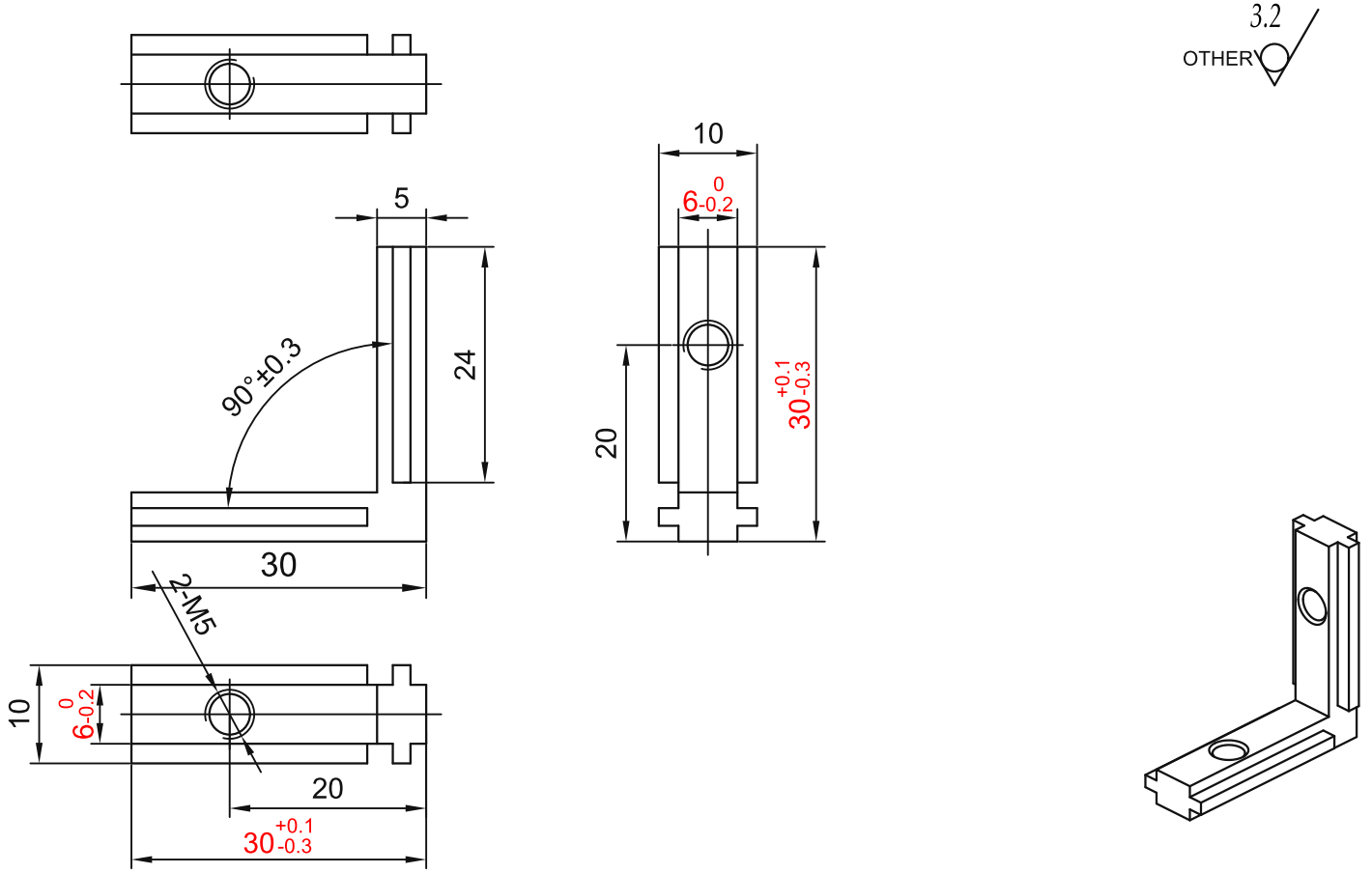

TECHNICAL NOTES:
1. Unspecified dimensional tolerances: IT10.
2. Unspecified fillets/chamfers: R/C0.5; threaded-hole chamfers: C0.5.
3. Zinc-plate carbon steel; electrolytically finish SUS304;
no obvious mould marks or burrs.
4. Threads must run freely.

sinsdar

L-SHAPE CAST INTERIOR JOINT BRACKETS

DRAWING / PART NUMBER

XADQ21-206-M5 / XADQ31-206-M5

MATERIAL: 21: carbon steel; 31: SUS304

UNIT: mm SCALE: see dimensions SHEET: 1 / 1