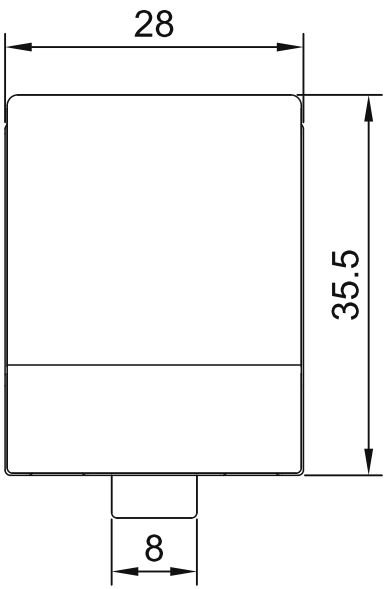

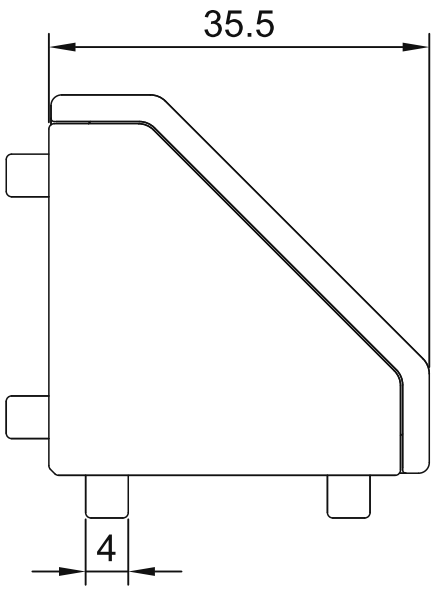

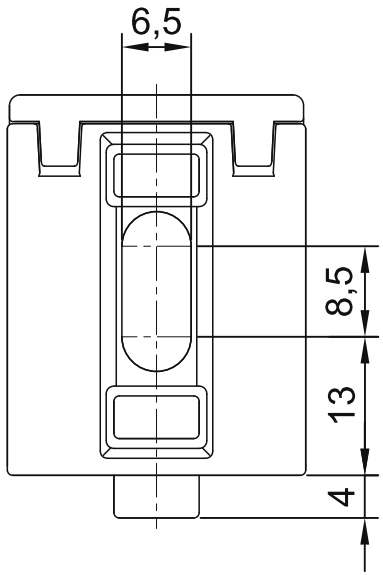

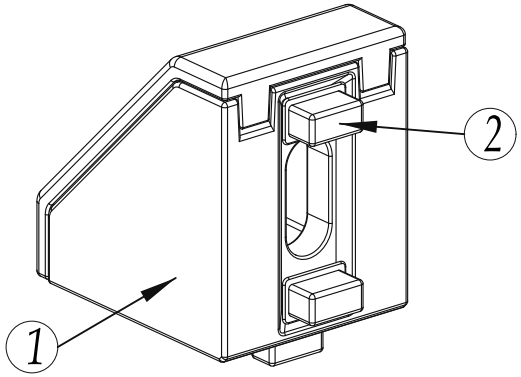

ITEM	PART NUMBER	NAME	QTY	MATERIAL	UNIT MASS	TOTAL	NOTES
2	ABB11-GM-8	CAP	4				
1	ABB11-G306-3030D	COVERED DIE-CAST BRACKET	1				

TECHNICAL NOTES:
1. Unspecified tolerances: +/-0.18 mm.
2. See 3D file for unspecified dimensions.
3. No burrs or obvious mould marks; round sharp edges R0.3.
4. Powder-coat the bracket surface; keep the logo clear.
5. For EU308 profiles: one ABB11-G306-3030D (including cover) + four ABB11-GM-8 caps.

sinsdar

DIE-CAST CORNER BRACKETS

DRAWING / PART NUMBER
XABB11-308-3030D

MATERIAL: ADC12

UNIT: mm SCALE: see dimensions SHEET: 1 / 1