

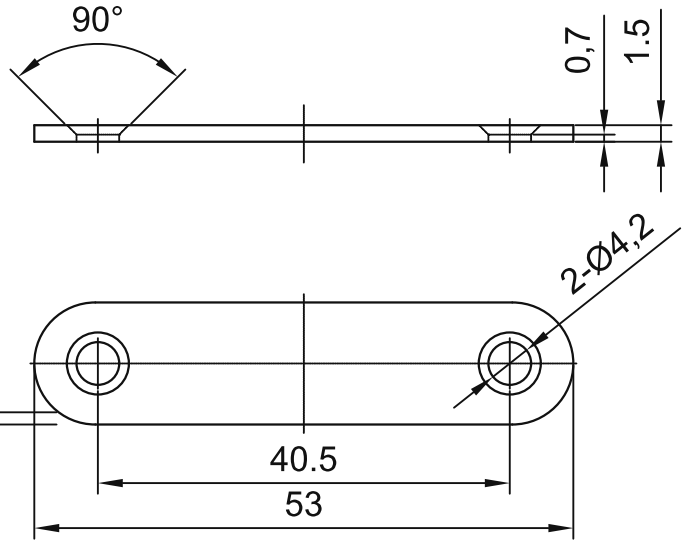

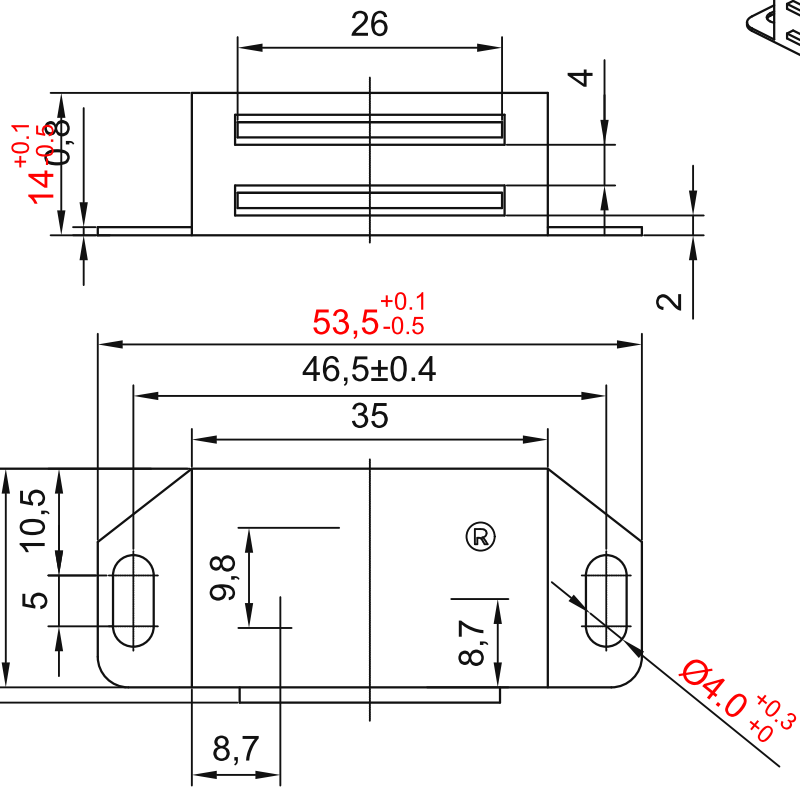

ACCESSORY: USE WITH M3 HEX SOCKET COUNTERSUNK SCREW
MATERIAL: CARBON STEEL
FINISH: BLUE ZINC PLATING

TECHNICAL NOTES:
1. Unspecified dimensional tolerances: IT12.
2. Secure magnetic retention required by source drawing.
3. No obvious surface scratches or damage.
4. Natural finish.

sinsdar

PROFILE DOOR CATCHES

DRAWING / PART NUMBER
XAKB31

MATERIAL: Stainless steel
UNIT: mm SCALE: see dimensions SHEET: 1 / 1