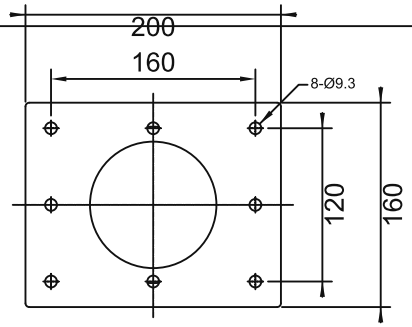

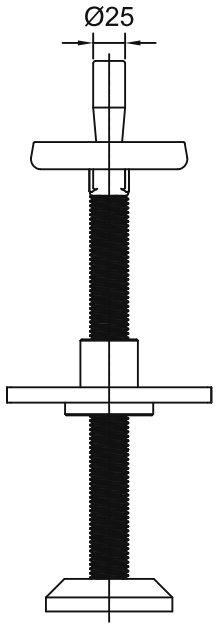

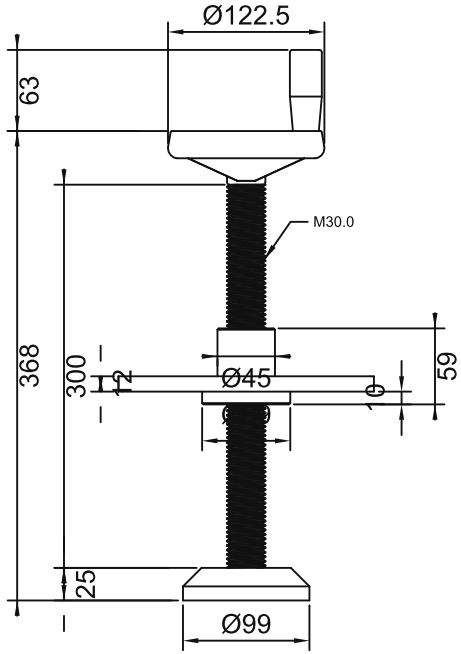

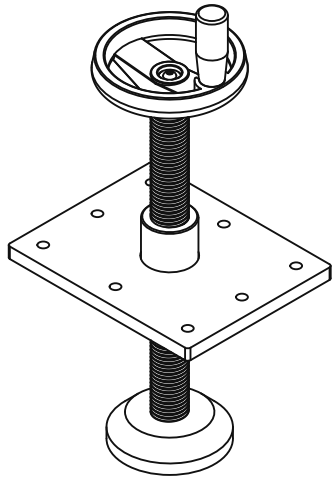

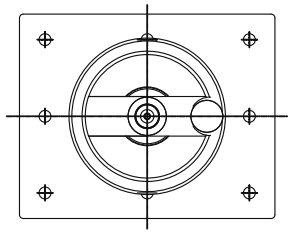

TECHNICAL NOTES:
1. Unspecified tolerances: GB/T 1804, class M.
2. See 3D file for unspecified dimensions.
3. No burrs, deformation or other defects; break sharp edges.
4. Finish: zinc plating.
5. Threaded rod must operate smoothly.

sinsdar

HAND CRANK SUPPORTS

DRAWING / PART NUMBER

XACF21-SY

MAIN BODY: Carbon steel

UNIT: mm SCALE: see dimensions SHEET: 1 / 1