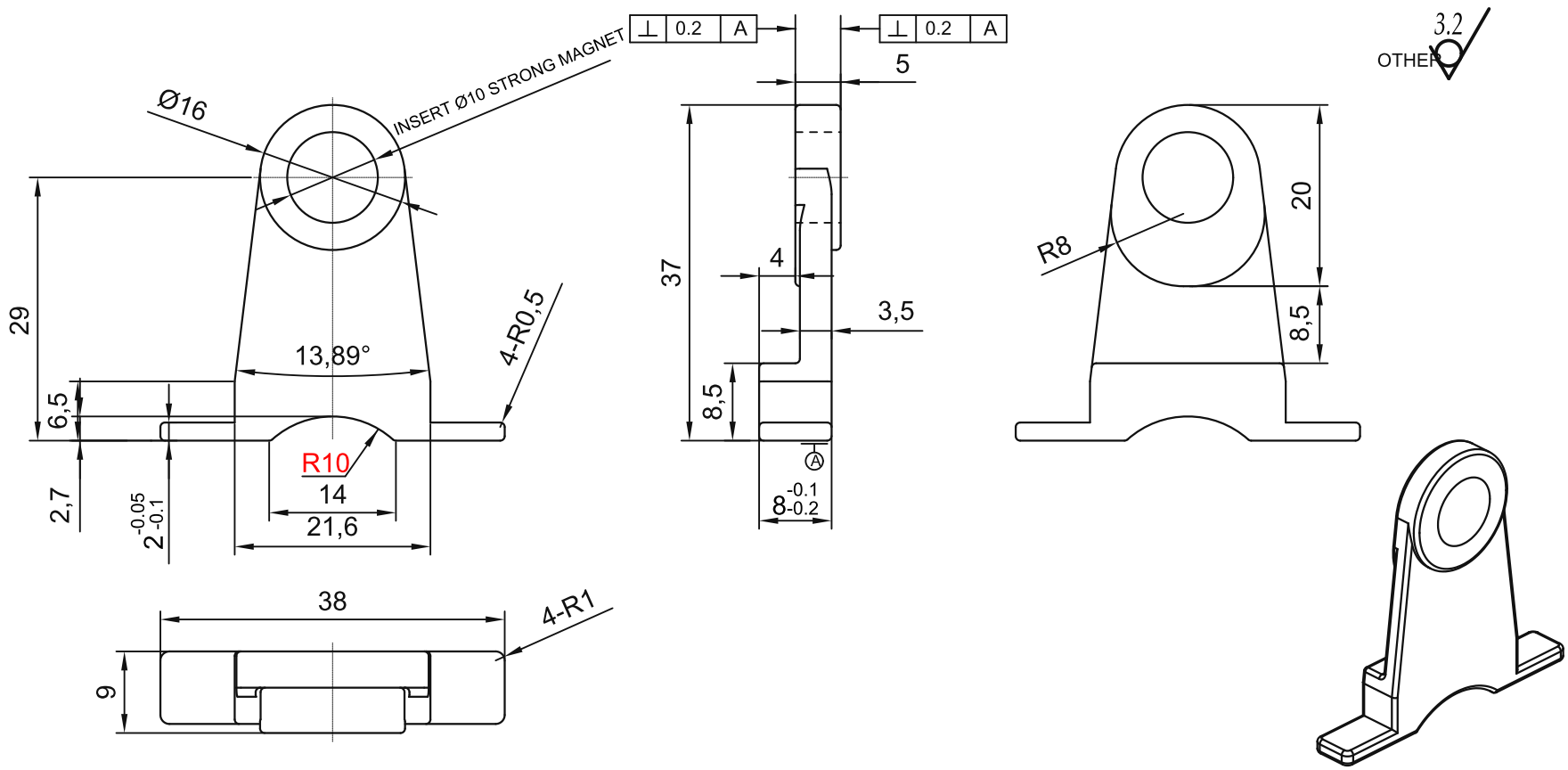

TECHNICAL NOTES:
1. Unspecified dimensional tolerances: +/-0.3.
2. Unspecified fillets: R0.5; round sharp edges R0.5.
3. Nickel-plate the surface; no obvious mould marks or burrs.
4. Magnet must not protrude above the product surface.

6. Unit mass: 27.5 g.

sinsdar

DOOR STOPPERS

DRAWING / PART NUMBER
XAKC22-3040-Y

MATERIAL: Carbon steel
UNIT: mm SCALE: see dimensions SHEET: 1 / 1