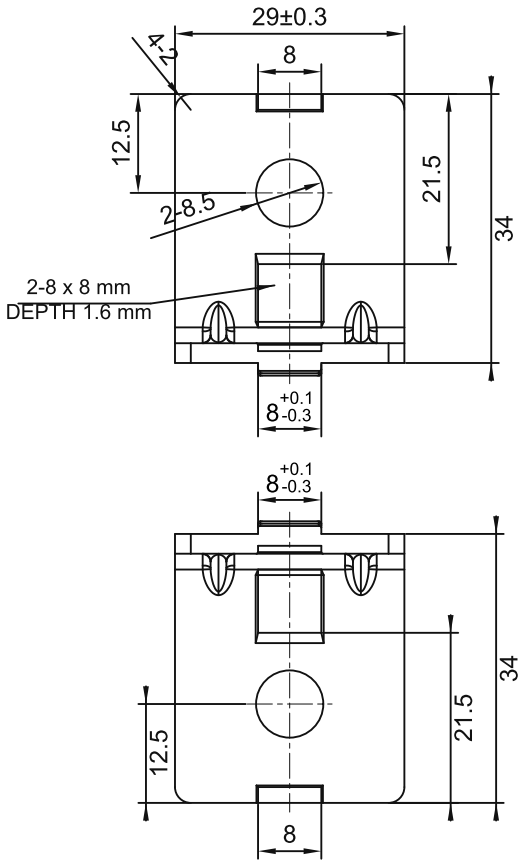

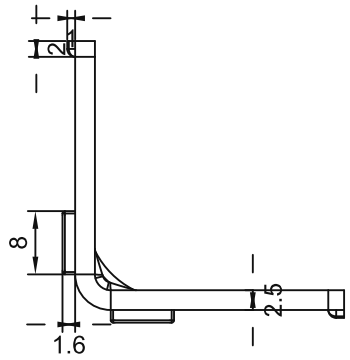

TECHNICAL NOTES:
1. Unspecified dimensional tolerances: +/-0.3 mm.
2. Unspecified fillets: R0.3.
3. Break sharp edges; no burrs, surface scratches or impact damage.
4. Nickel-plate the surface.

sinsdar

SHEET METAL CORNER BRACKETS

DRAWING / PART NUMBER

XABD22-308-3030

MATERIAL: Carbon steel

UNIT: mm SCALE: see dimensions SHEET: 1 / 1