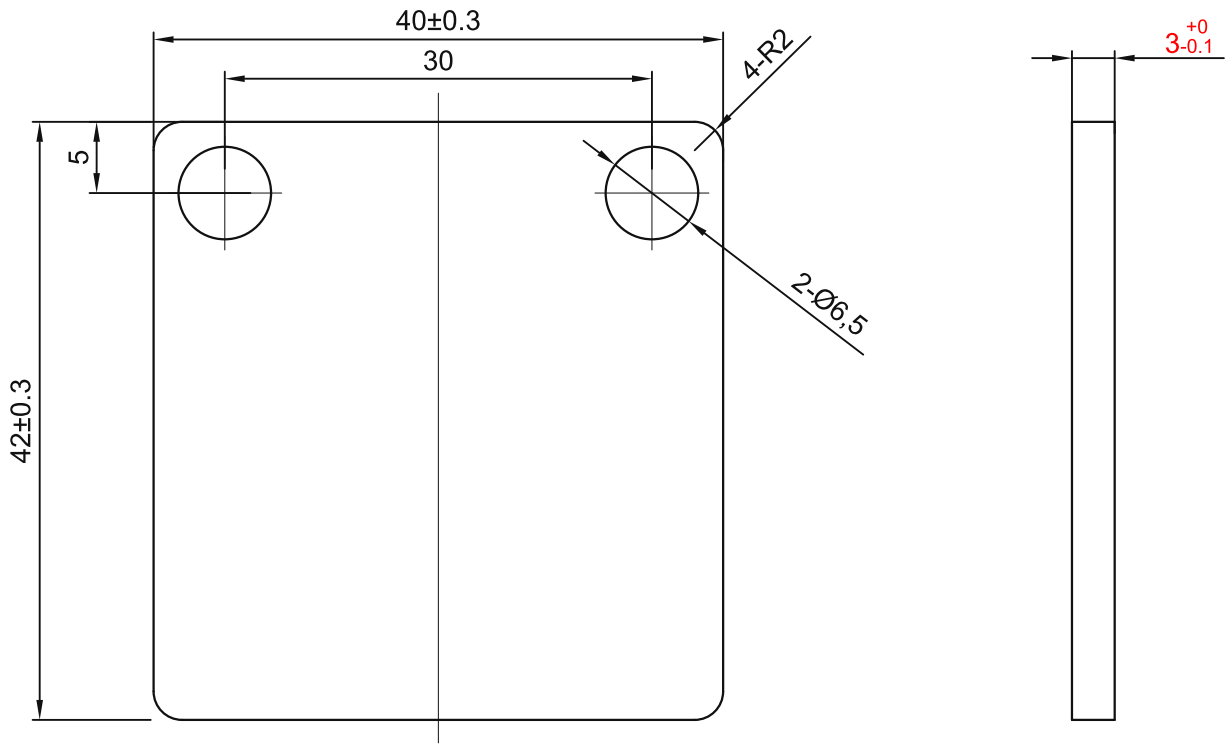

TECHNICAL NOTES:
1. Unspecified dimensional tolerances: +/-0.3 mm.
2. Break sharp edges; no burrs.
3. No scratches or impact damage on the surface.
4. Brush the product surface.

sinsdar

PROFILE RAIL END CAPS

DRAWING / PART NUMBER
XAVF31-B

MATERIAL: SUS304

UNIT: mm SCALE: see dimensions SHEET: 1 / 1