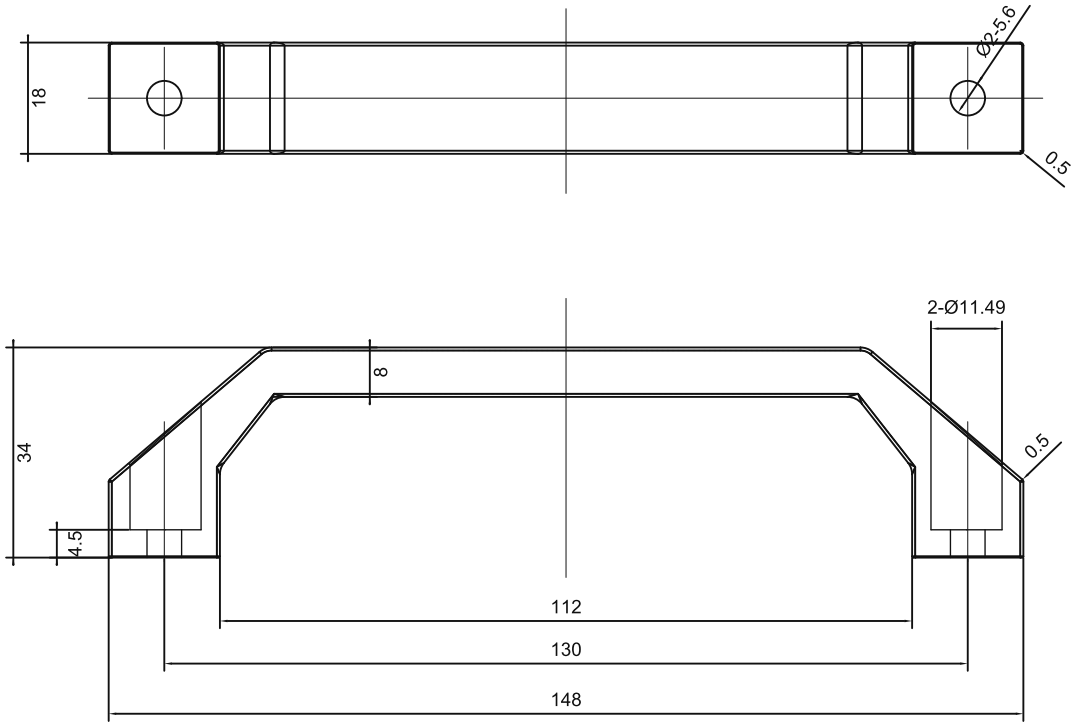

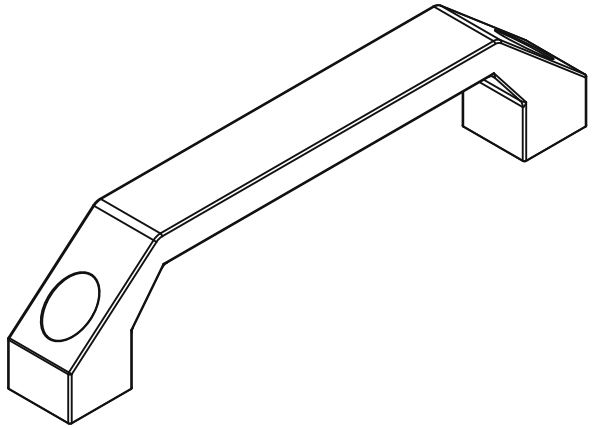

SELECTION REFERENCE - NOT FOR MANUFACTURE
1. Material: ADC12. Finish: Black powder coating.
2. Official nominal interfaces shown; verify mating dimensions.
3. Supplier auxiliary contours retained for reference.
4. Manufacturing tolerances are not specified in the reviewed official catalogue.

sinsdar

SQUARE BRIDGE PULL HANDLES

DRAWING / PART NUMBER
XAKL13-130

MATERIAL: ADC12
UNIT: mm SCALE: see dimensions SHEET: 1 / 1