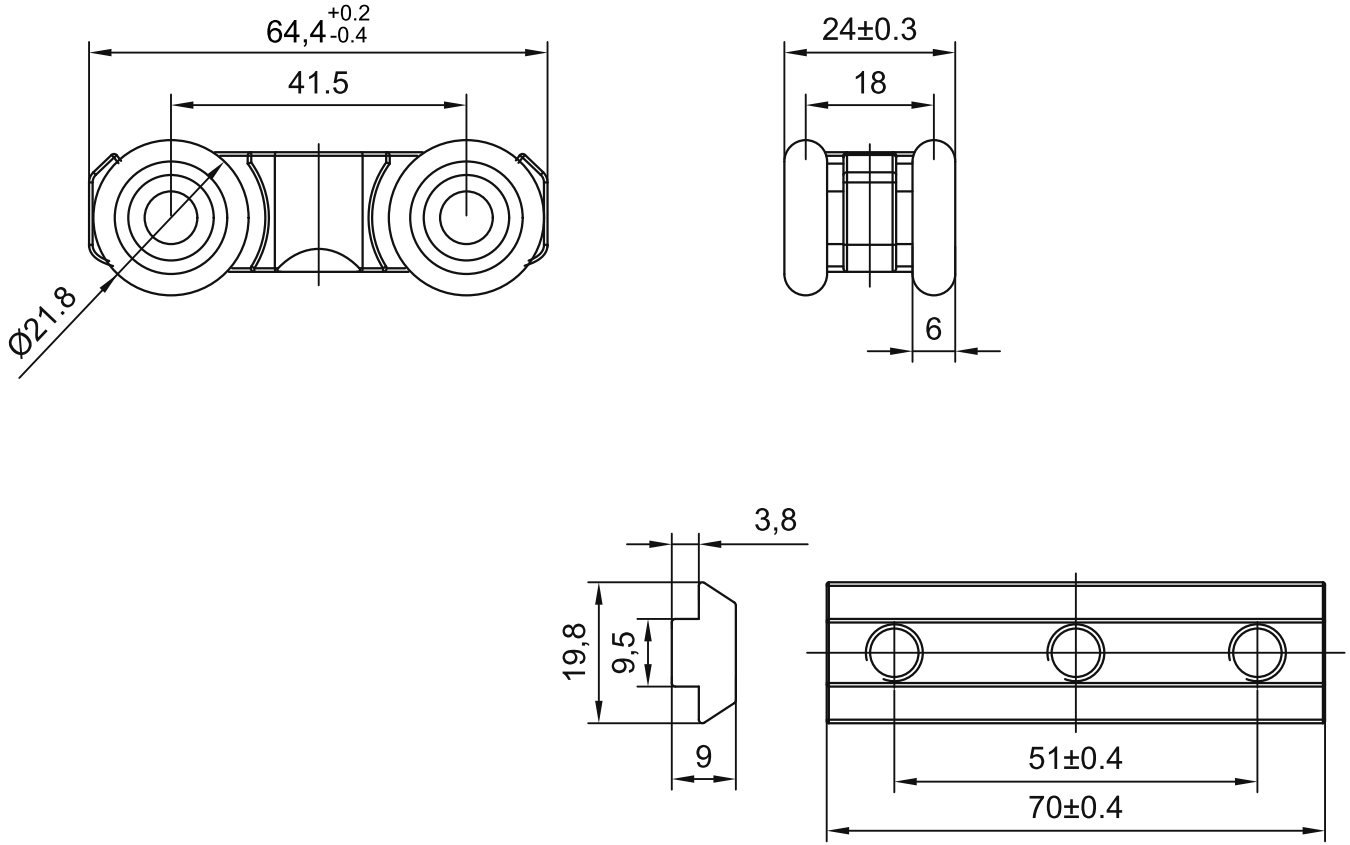

TECHNICAL NOTES:
1. Official target dimensions shown in mm.
2. Surface finish: Chrome plated.
3. Verify the panel cutout and mating fasteners before assembly.

sinsdar

SLIDING DOOR TROLLEYS

DRAWING / PART NUMBER
XAVF31-H-40

MATERIAL: Zinc alloy
UNIT: mm SCALE: see dimensions SHEET: 1 / 1