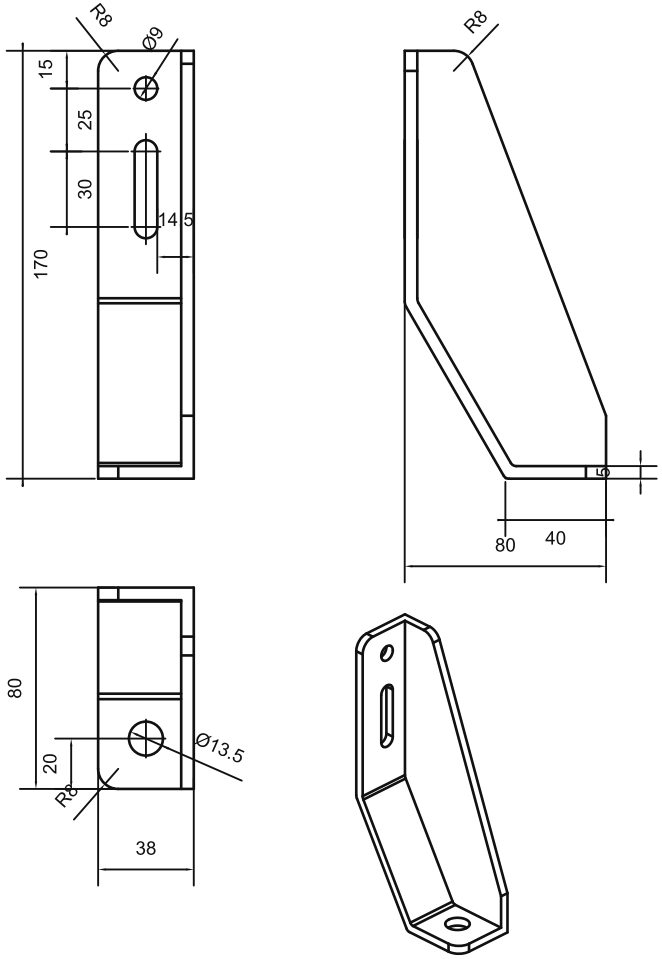


TECHNICAL NOTES:
1. Unit: mm.
2. Surface finish: Black baked coating.
3. Verify mating profile dimensions and floor anchors.
Target nominal dimensions; manufacturing tolerances not specified in reviewed catalogue.

sinsdar

PROFILE FLOOR SUPPORTS

DRAWING / PART NUMBER

XAVT27-40

MATERIAL: Carbon steel

UNIT: mm SCALE: see dimensions SHEET: 1 / 1