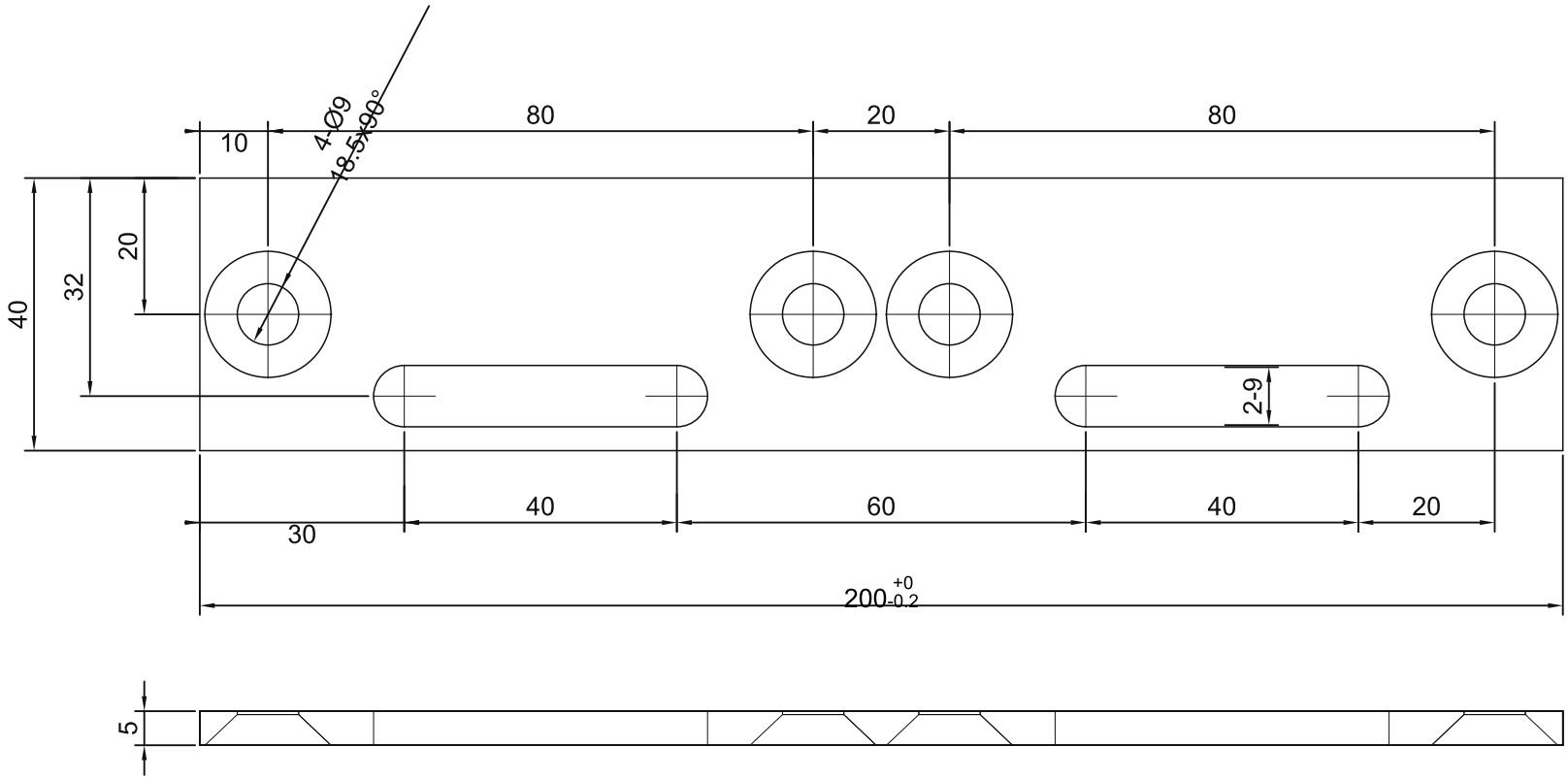

1. Finish: alkali-sand anodize.
2. Unspecified tolerances: IT10.
3. See 3D file for unspecified dimensions.
4. No burrs; round sharp edges R0.3.

sinsdar

STEP CONNECTING PLATES

DRAWING / PART NUMBER

XAYJ01-40200

MATERIAL: A6063-T5

UNIT: mm SCALE: see dimensions SHEET: 1 / 1