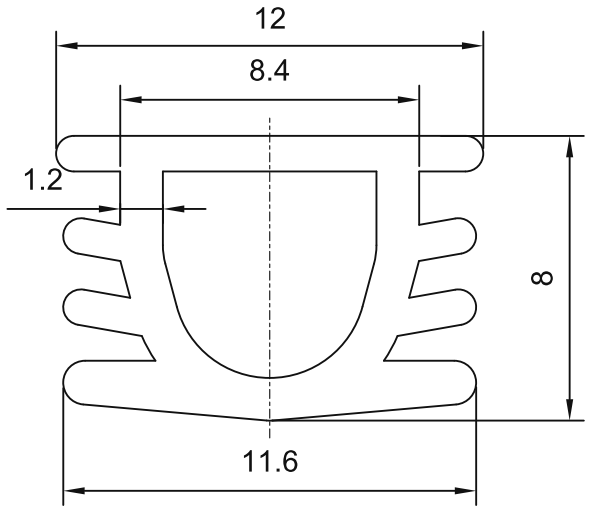

TECHNICAL NOTES:
1. Unit: mm.
2. Verify the complete section against the mating profile and panel.
COLOR / VARIANT:
XARG51-4010: Light grey, similar to RAL7047.
XARG52-4010: Black.

sinsdar

SEALING STRIPS

DRAWING / PART NUMBER

XARG51-4010 / XARG52-4010

MATERIAL: PVC

UNIT: mm SCALE: see dimensions SHEET: 1 / 1