MATING PROFILE

*AOB02-H100100*

*AOB05-100100J*

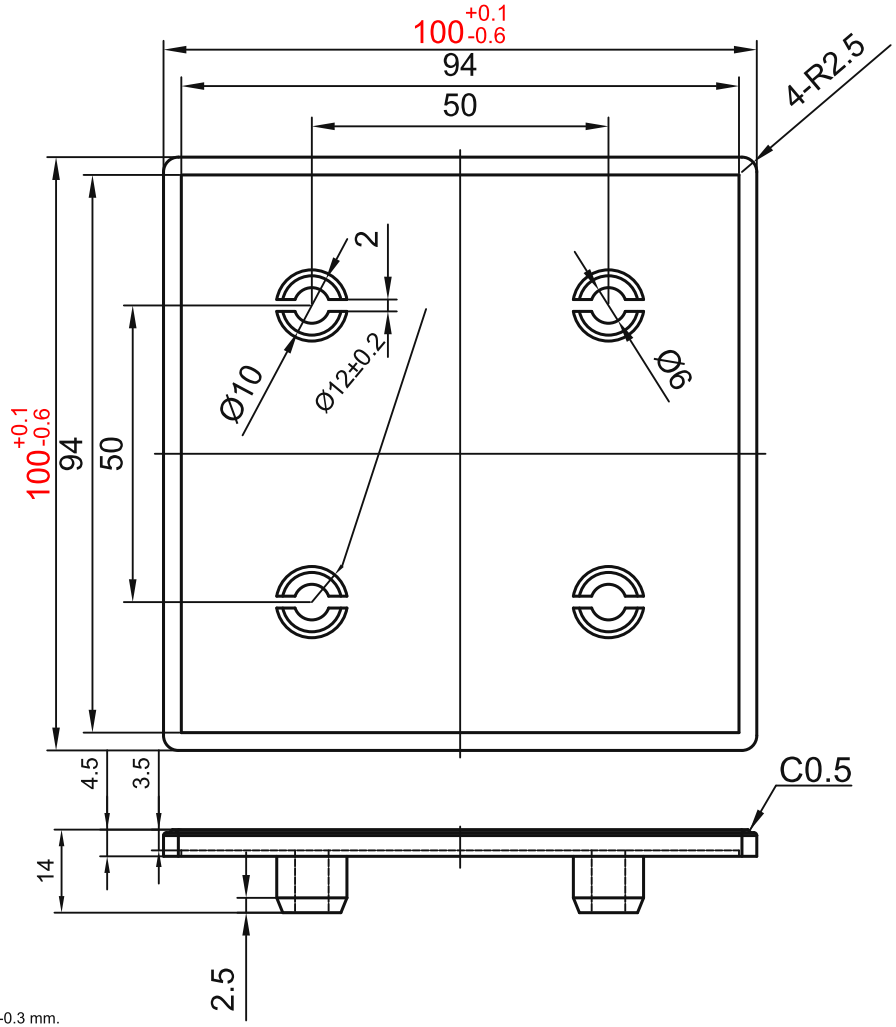





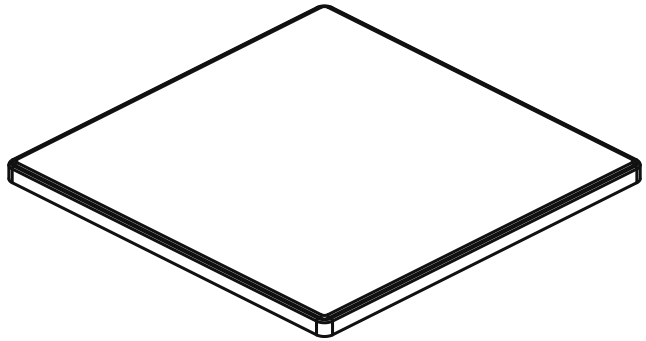

TECHNICAL NOTES:
1. Unspecified dimensional tolerances: +/-0.3 mm.
2. Unspecified fillets/chamfers: R/C0.5.
3. Remove burrs; no shrinkage or flow marks.

COLOR / VARIANT:
XARC51-5010-H100100: Light gray (similar to RAL 7038).
XARC52-5010-H100100: Black.

sinsdar

PLASTIC END CAPS

DRAWING / PART NUMBER

XARC51-5010-H100100 / XARC52-5010-H100100

MATERIAL: PA

UNIT: mm SCALE: see dimensions SHEET: 1 / 1