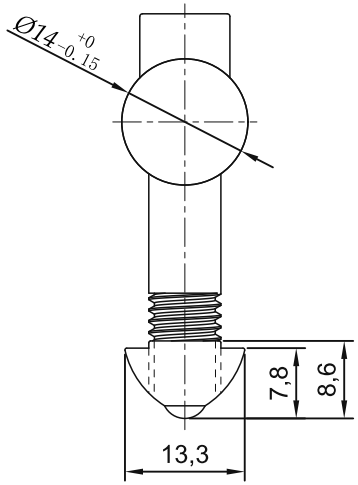

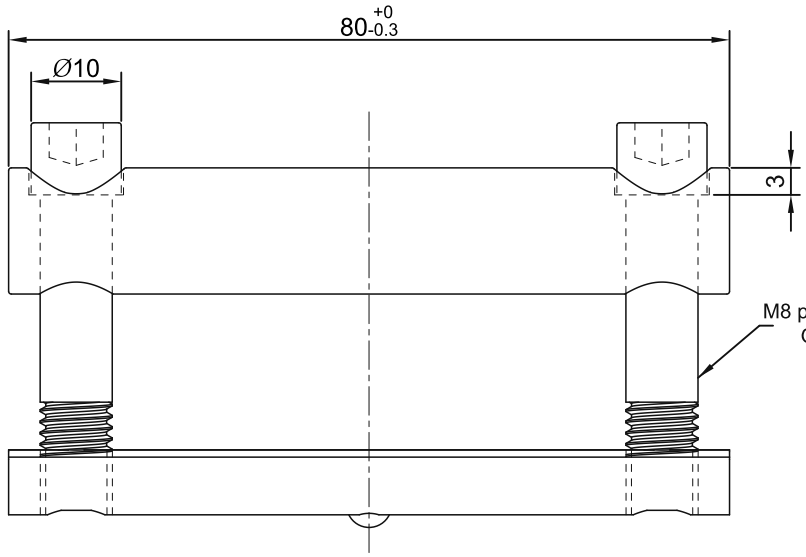

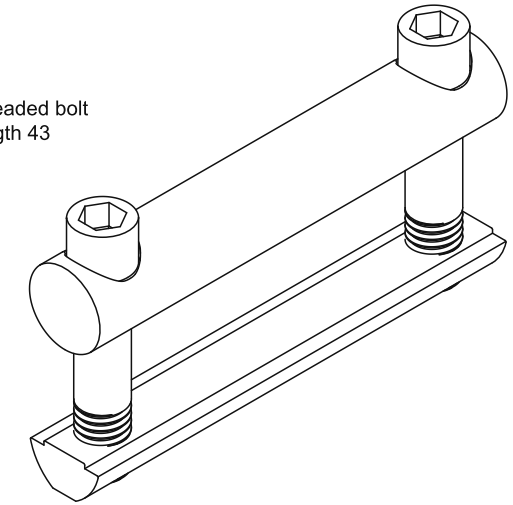

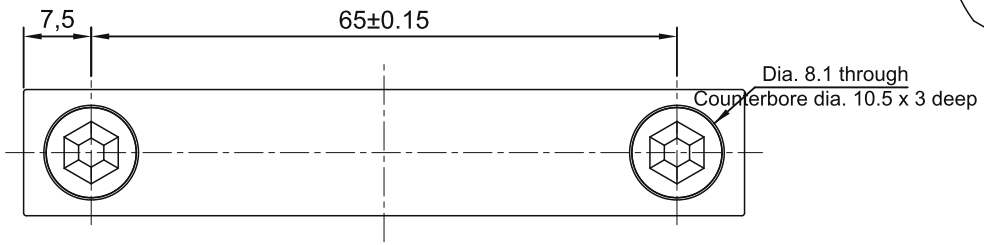

TECHNICAL NOTES:
1. Unspecified tolerances: GB/T1804-2000, class M.
2. No burrs, plating defects or other defects.
3. Unspecified edge radii: R0.3.
4. Surface finish: zinc plating.

sinsdar

INTERNAL PROFILE CONNECTORS

DRAWING / PART NUMBER
XADJ21-408-4080

MATERIAL: Carbon steel

UNIT: mm SCALE: see dimensions SHEET: 1 / 1