

SECTION B-B

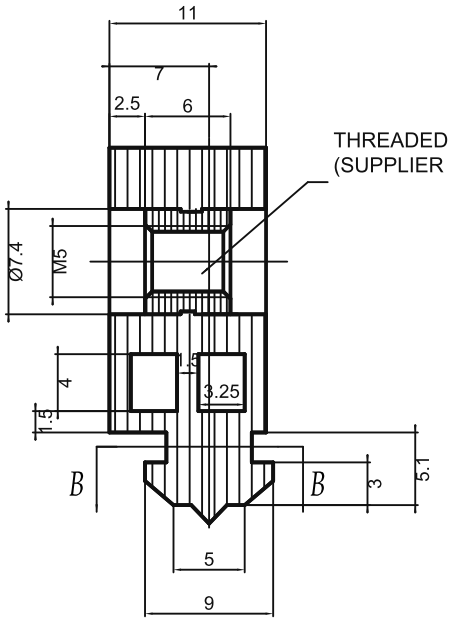

SECTION A-A

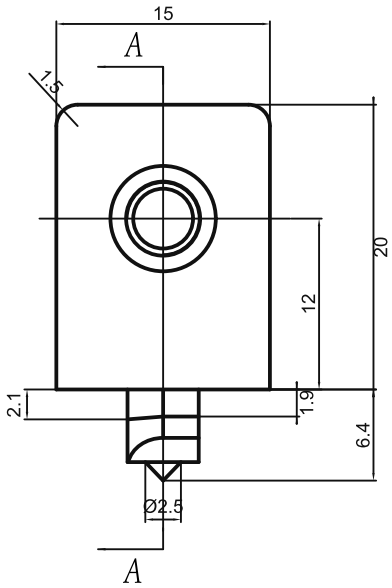

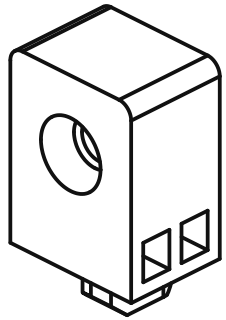

SELECTION REFERENCE - NOT FOR MANUFACTURE
1. Material: PA. Finish: Light grey, similar to RAL7030.
2. Official nominal interfaces shown; verify mating dimensions.
3. Supplier auxiliary contours retained for reference.
4. Manufacturing tolerances are not specified in the reviewed official catalogue.

sinsdar

SPACER BLOCKS

DRAWING / PART NUMBER
XAMV53-206

MATERIAL: PA

UNIT: mm SCALE: see dimensions SHEET: 1 / 1