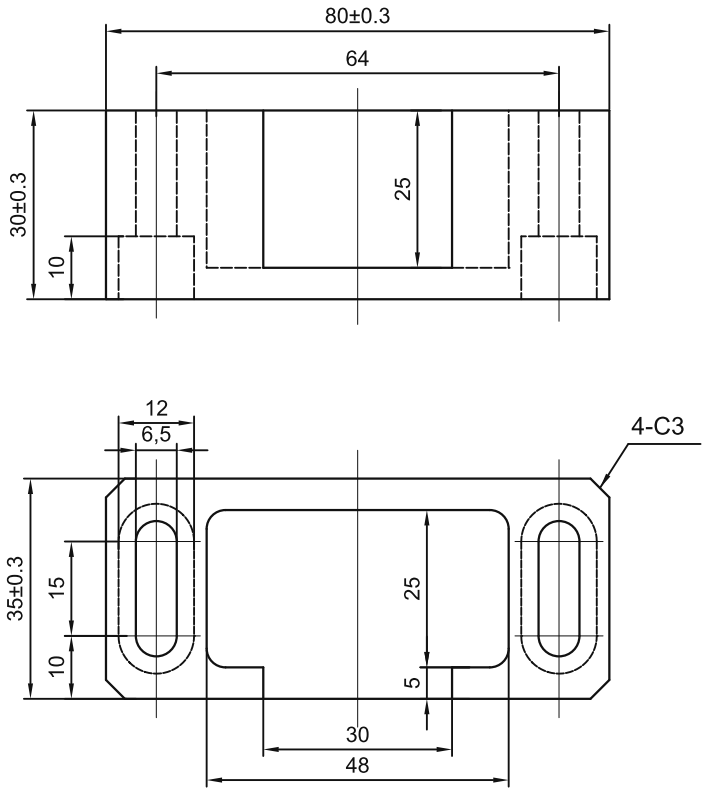

NOTES

TECHNICAL NOTES:
1. Unspecified dimensional tolerances: +/-0.3 mm.
2. Remove burrs and break sharp edges. No scratches, impact damage or spots.
3. Anodize the surface.

sinsdar	PROFILE LOCK SLOT PLATES
DRAWING / PART NUMBER	XAVJ02-K
MATERIAL: A6063	
UNIT: mm SCALE: see dimensions SHEET: 1 / 1	