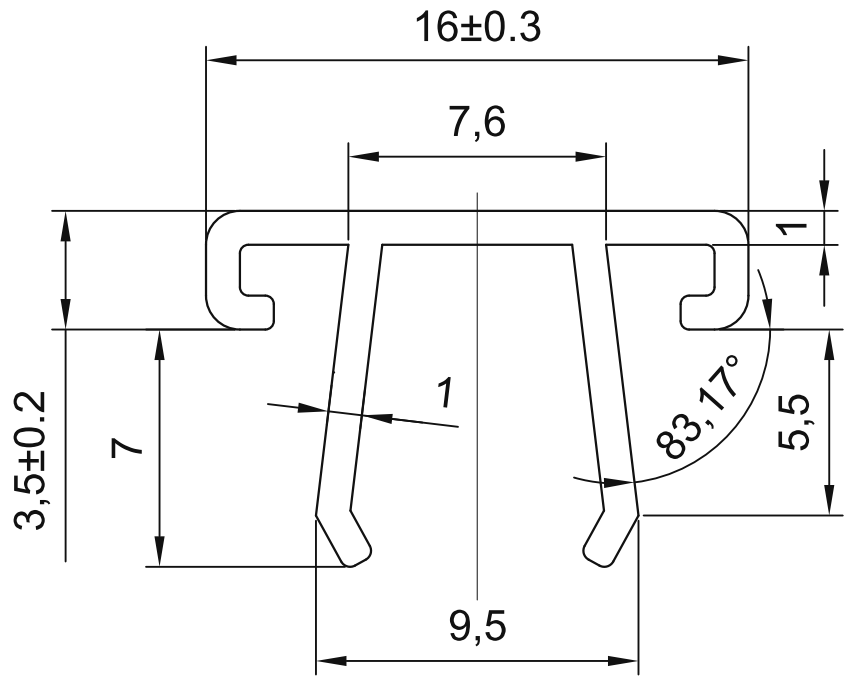

OTHER 3.2

TECHNICAL NOTES:
1. Unspecified dimensional tolerances: GB/T1804-2000, class M.
2. Unspecified fillets: R0.3-0.5.
3. No colour variation or flow marks on the surface.
4. Length per strip: 2 m; mass per metre: 60 g.
5. Source application: EU308 and EU408 profiles; verify mating dimensions.

sinsdar

SEALING STRIPS

DRAWING / PART NUMBER
XARF51-308

MATERIAL: PVC, light grey (RAL7047)
UNIT: mm SCALE: see dimensions SHEET: 1 / 1