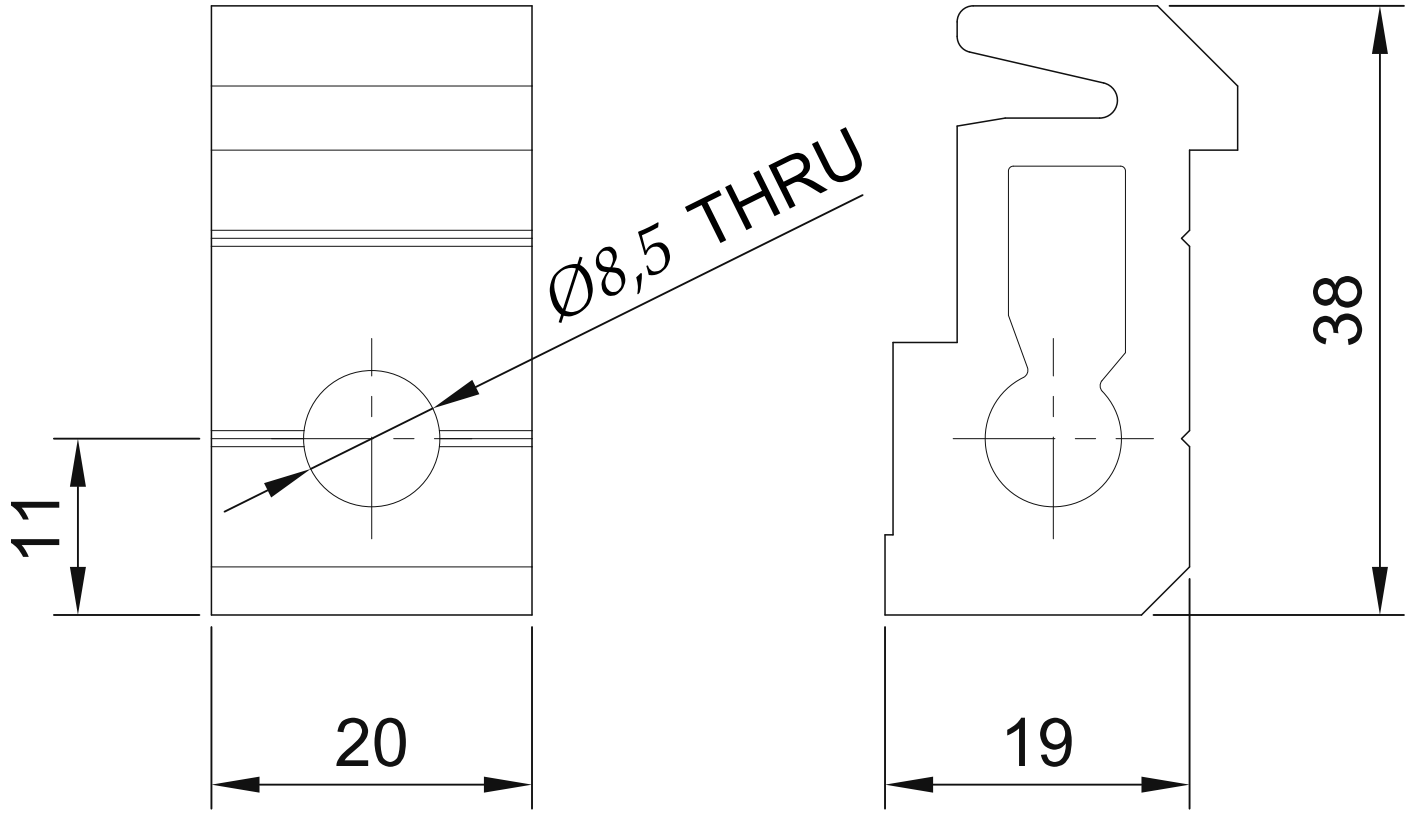

TECHNICAL NOTES:
1. Unspecified tolerances: IT10.
2. See 3D file for unspecified dimensions.
3. No burrs; break sharp edges.
4. Sandblast and anodize; cut faces and machined areas not treated.
5. Machine from AYF05-LJ-1938 profile.

sinsdar

STEP CLAMPING BLOCKS

DRAWING / PART NUMBER
XAYJ01-1938-A

MATERIAL: A6063-T5

UNIT: mm SCALE: see dimensions SHEET: 1 / 1