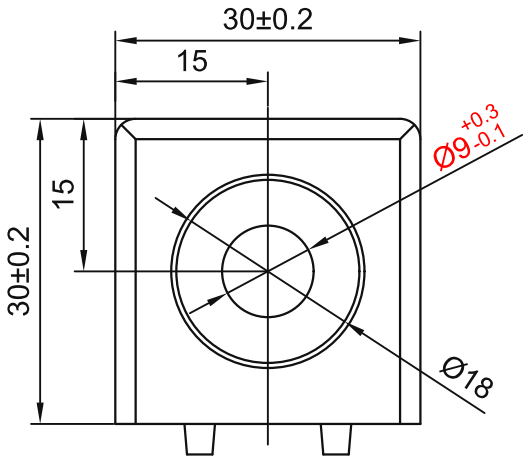

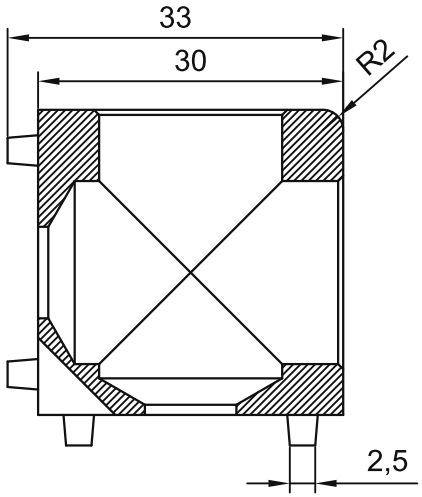

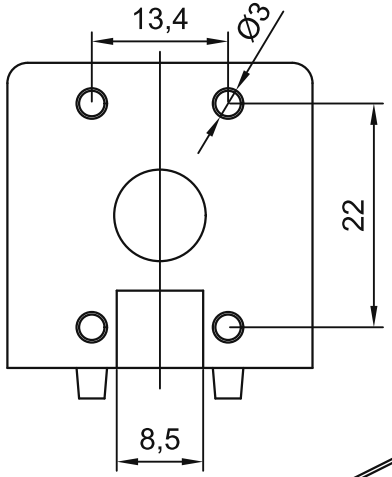

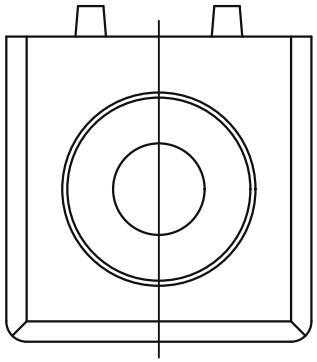

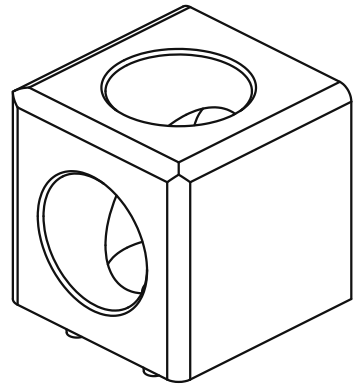

TECHNICAL NOTES:
1. Unspecified dimensional tolerances: IT10.
2. Unspecified fillets/chamfers: R/C0.5; threaded-hole chamfers: C0.5.
3. Spray-paint the surface; no obvious mould marks or burrs.
4. Includes 2 end caps.

sinsdar

CUBE CONNECTORS

DRAWING / PART NUMBER
XADW48-308-D

MATERIAL: ADC12

UNIT: mm SCALE: see dimensions SHEET: 1 / 1