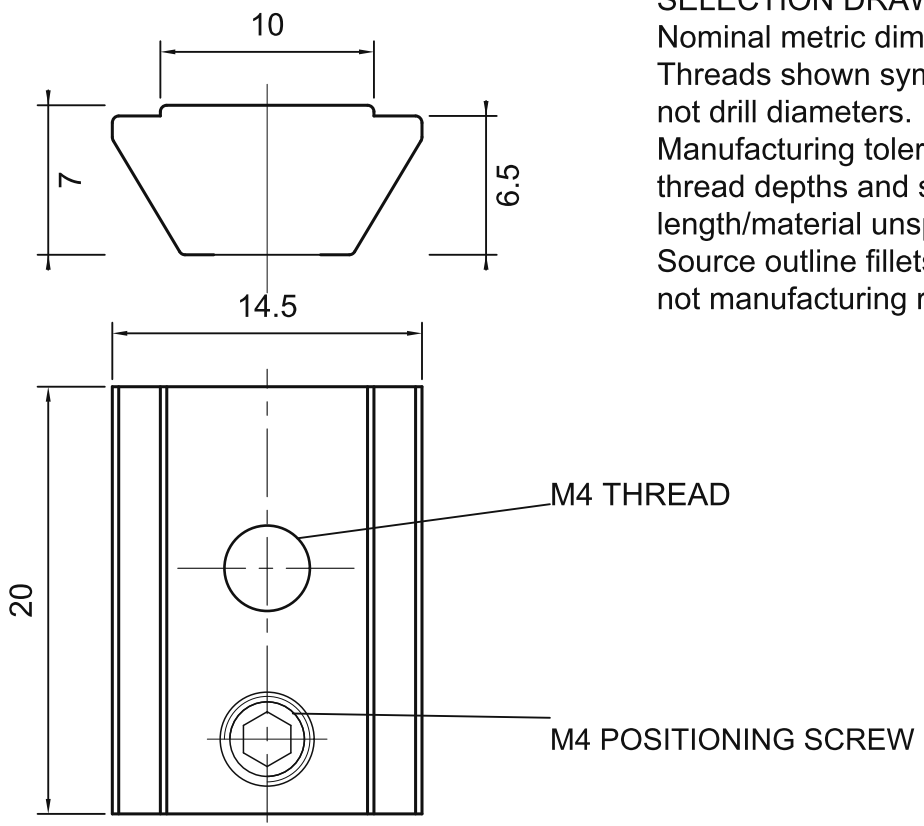

FINISH: Zinc plated
SELECTION DRAWING
Nominal metric dimensions.
Threads shown symbolically;
not drill diameters.
Manufacturing tolerances,
thread depths and screw
length/material unspecified.
Source outline fillets are
not manufacturing requirements.

Unit: mm. Geometry is editable.
Verify actual profile interface.

sinsdar

SET-SCREW T-NUT

DRAWING / PART NUMBER
XAHU21-4010-M4

MATERIAL: Carbon steel
UNIT: mm SCALE: see dimensions SHEET: 1 / 1