MATING PROFILE
AOB02-H4590
AOB02-H4590C

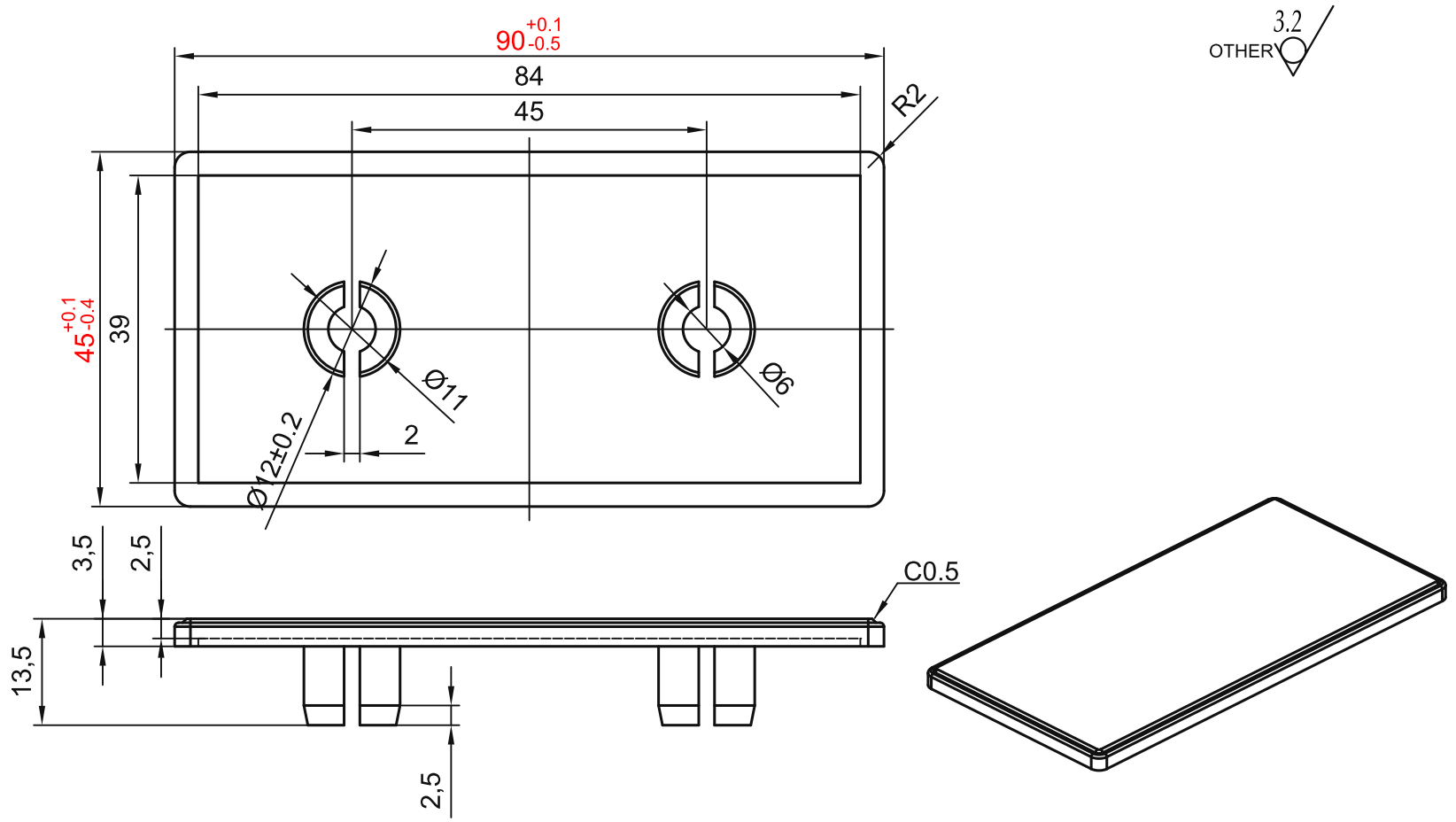

TECHNICAL NOTES:
1. Unspecified dimensional tolerances: +/-0.3 mm.
2. Unspecified fillets/chamfers: R/C0.5.
3. Remove burrs; no shrinkage or flow marks.

sinsdar

PLASTIC END CAPS

DRAWING / PART NUMBER

XARC51-4510-H4590 / XARC52-4510-H4590

MATERIAL: PA (51: light grey; 52: black)

UNIT: mm SCALE: see dimensions SHEET: 1 / 1