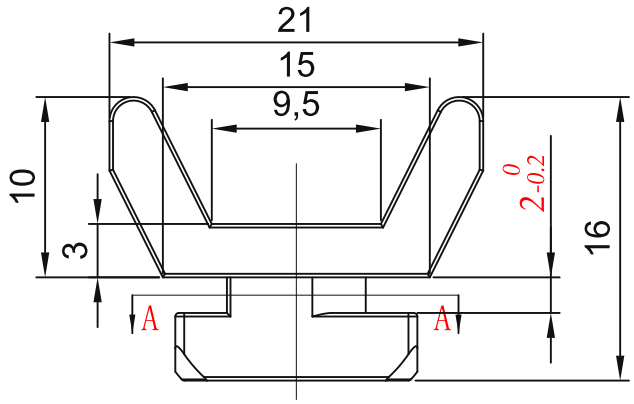

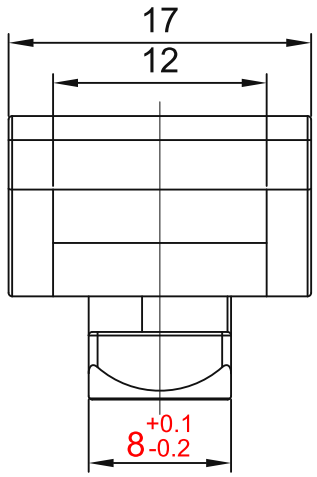

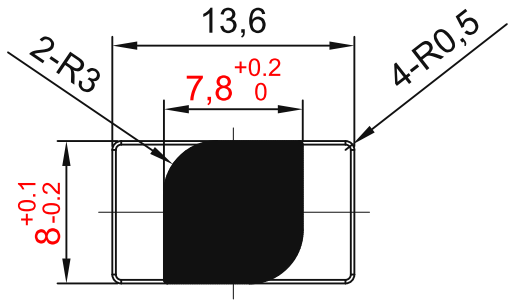

SECTION
A-A

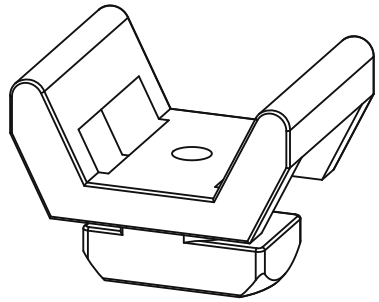

PP

TECHNICAL NOTES:
1. Unspecified dimensional tolerances: +/-0.2 mm.
2. Unspecified fillets: R0.2.
3. No drag marks, sink marks, short shots, deformation or other defects on the exterior.

sinsdar

CABLE TIE MOUNTS

DRAWING / PART NUMBER
XARS51-308

MATERIAL: PP (white)
UNIT: mm SCALE: see dimensions SHEET: 1 / 1