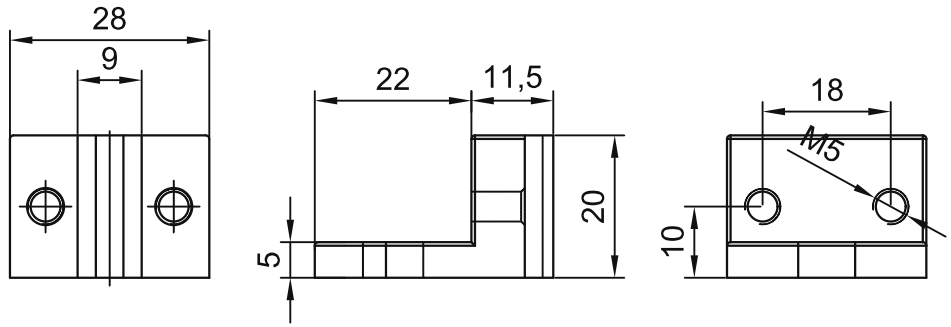

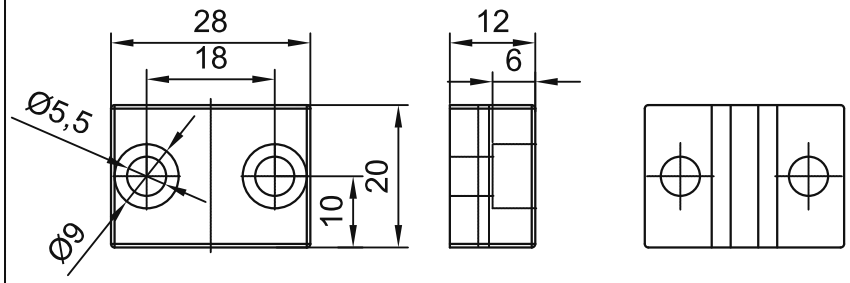

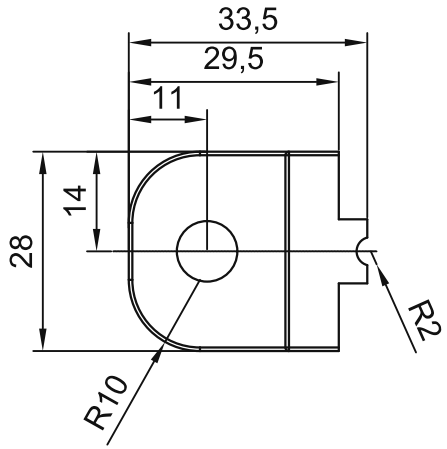

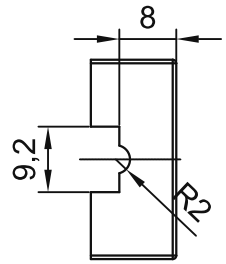

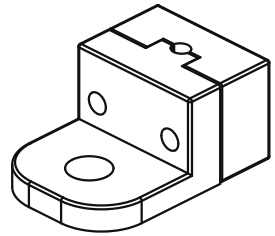

TECHNICAL NOTES:
1. Unspecified dimensional tolerances: +/-0.3 mm.
2. Unspecified fillets R0.5; round sharp edges R0.3;
threaded-hole chamfers C0.5.
3. Electrolytic surface treatment; no obvious mould marks or burrs.
4. Threads must run freely.

sinsdar

WIRE MESH CONNECTORS

DRAWING / PART NUMBER
XAVK31-4010

MATERIAL: SUS304

UNIT: mm SCALE: see dimensions SHEET: 1 / 1