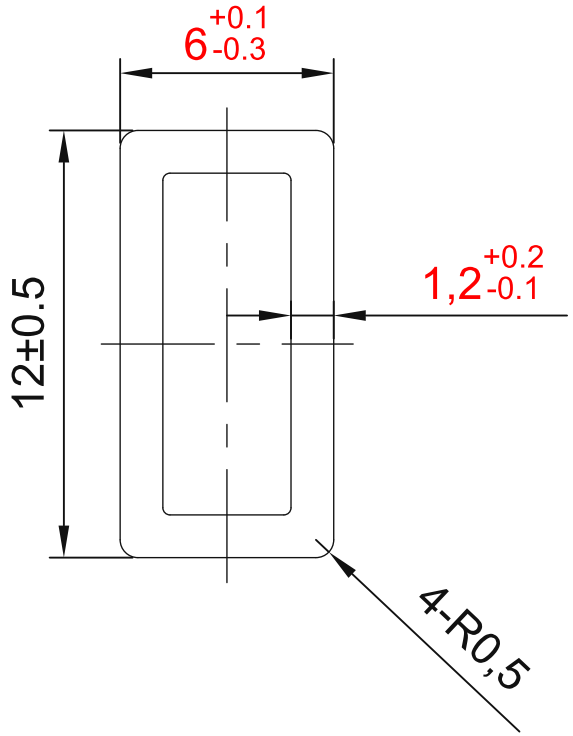

TECHNICAL NOTES:
1. Product colour: black.
2. Smooth surface without burrs, flash, flow marks or colour variation.
3. Product length: 2 m per strip.
4. Cross-sectional area: 37.26 mm2; mass per metre: 35.5 g/m.

sinsdar

SLIDE RAIL SPACERS

DRAWING / PART NUMBER
XAMP52-D

MATERIAL: High molecular weight polyethylene (black)
UNIT: mm SCALE: see dimensions SHEET: 1 / 1