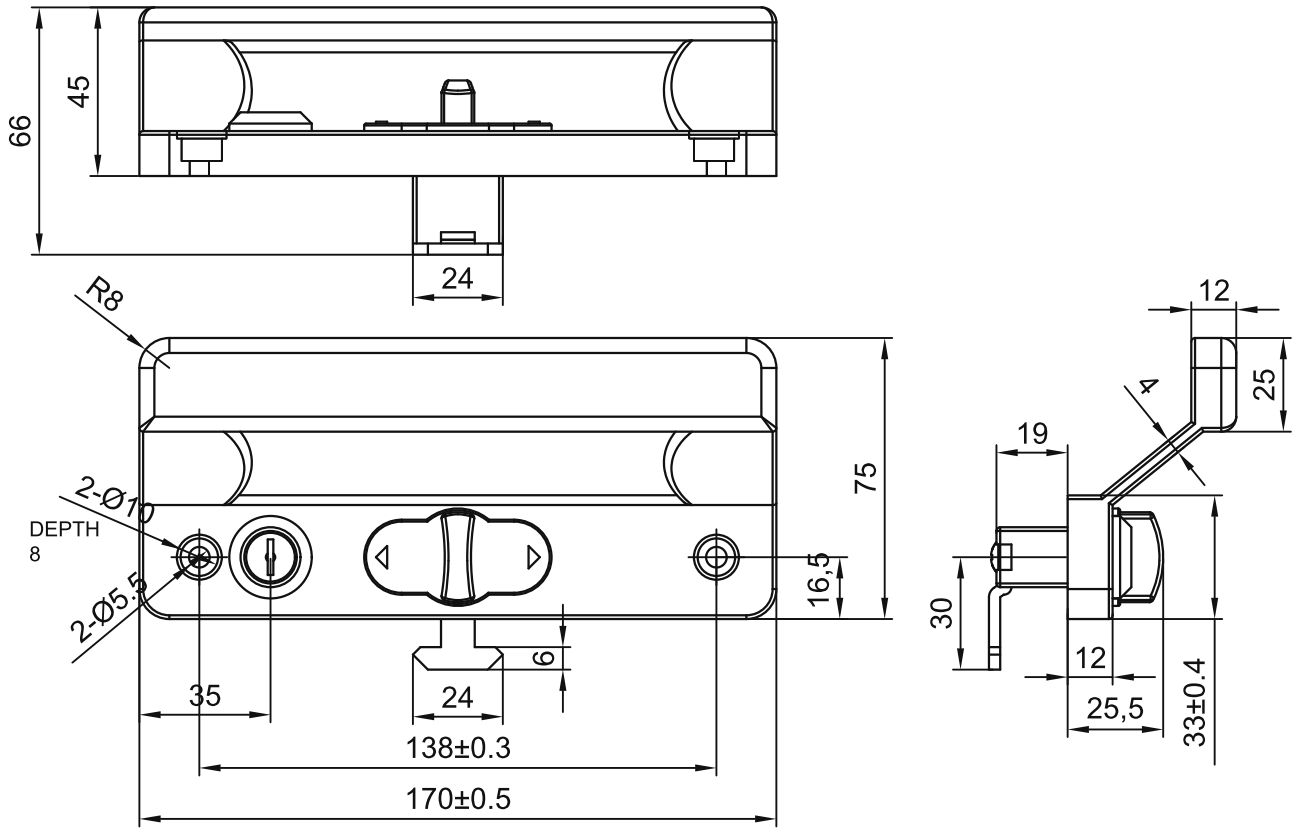

TECHNICAL NOTES:
1. Official target dimensions shown in mm.
2. Surface finish: 46: light grey baked coating; 47: black baked coating.
3. Verify the panel cutout and mating fasteners before assembly.

sinsdar

SLIDING DOOR HANDLES

DRAWING / PART NUMBER

XAVL46-P-L / XAVL47-P-L

MATERIAL: Zinc alloy

UNIT: mm SCALE: see dimensions SHEET: 1 / 1