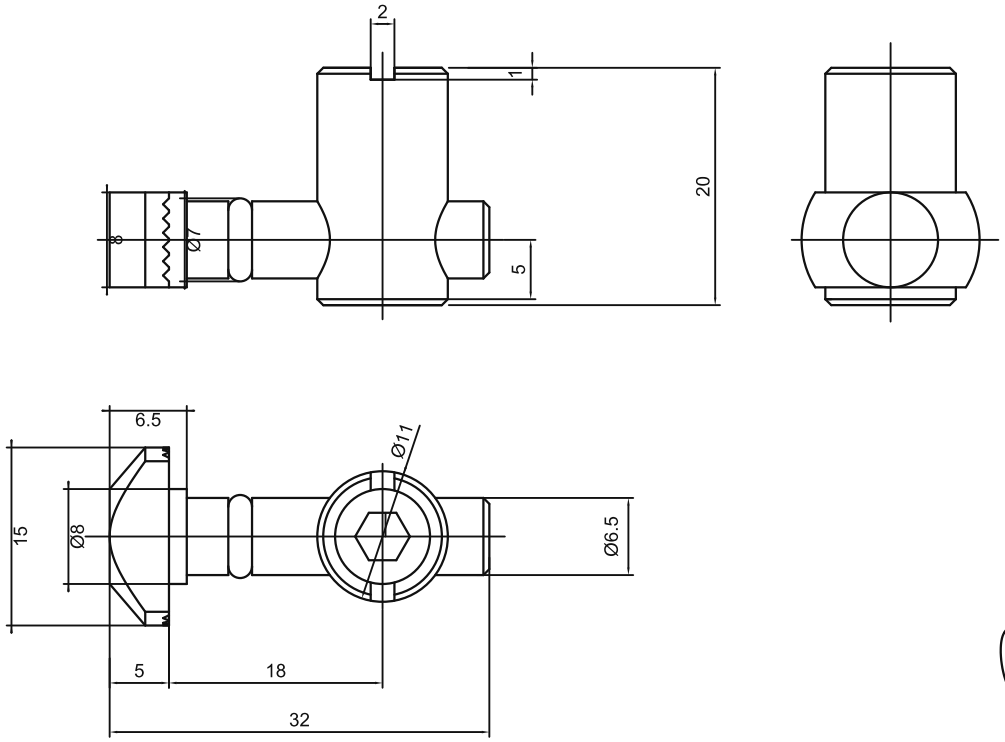

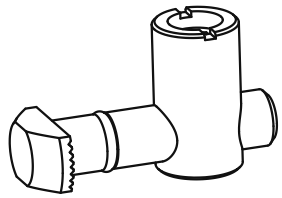

SELECTION REFERENCE - NOT FOR MANUFACTURE
1. Material: Carbon steel. Finish: Zinc plated.
2. Official nominal interfaces shown; verify mating dimensions.
3. Supplier auxiliary contours retained for reference.
4. Manufacturing tolerances are not specified in the reviewed official catalogue.

sinsdar

CENTRAL CONNECTORS

DRAWING / PART NUMBER

XADF21-308-90

MATERIAL: Carbon steel

UNIT: mm SCALE: see dimensions SHEET: 1 / 1