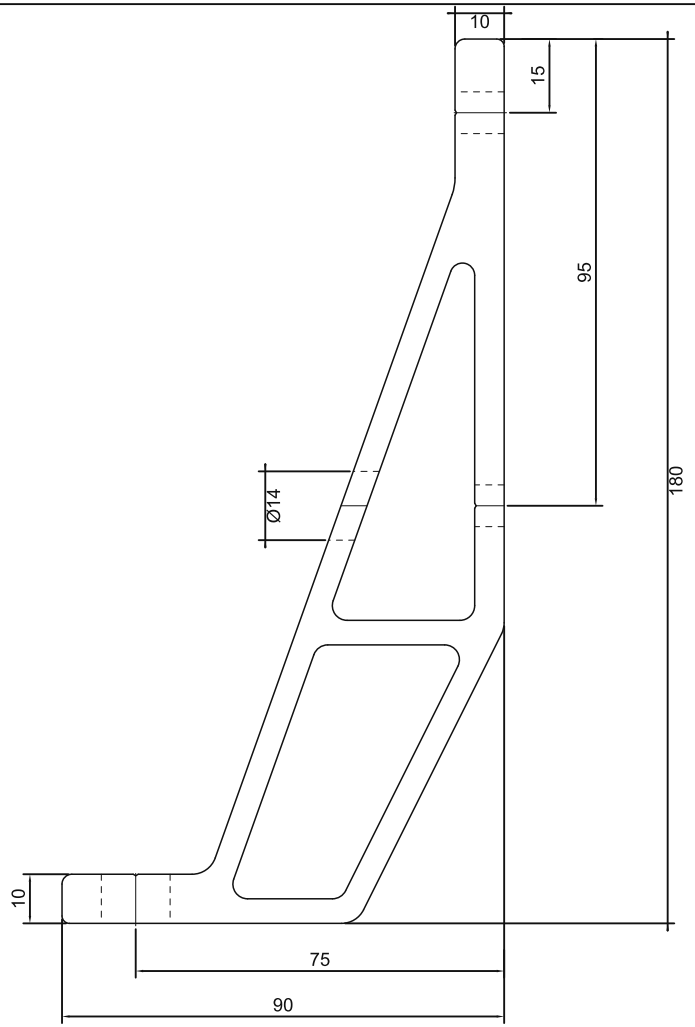

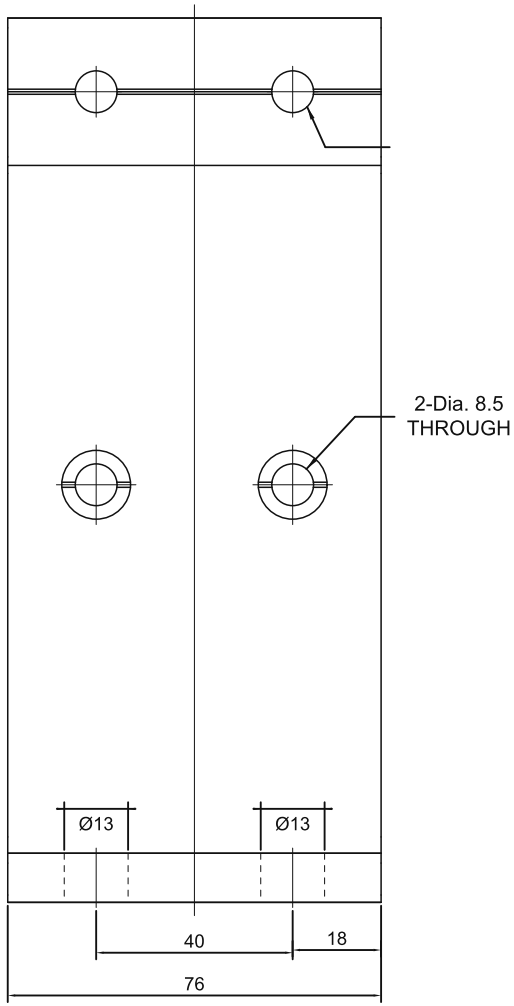

TECHNICAL NOTES:
1. Unit: mm.
2. Surface finish: Sandblasted anodized.
3. Verify mating profile dimensions and floor anchors.
4. Profile fixing holes: Ø8.5; recess: Ø14. Floor holes: Ø13.
Target nominal dimensions; manufacturing tolerances not specified in reviewed catalogue.

sinsdar

PROFILE FLOOR SUPPORTS

DRAWING / PART NUMBER

XAVT05-76

MATERIAL: A6063-T5

UNIT: mm SCALE: see dimensions SHEET: 1 / 1