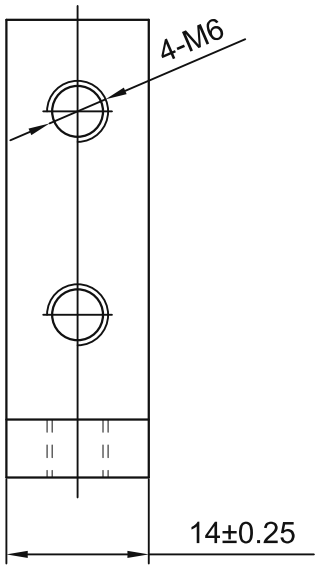

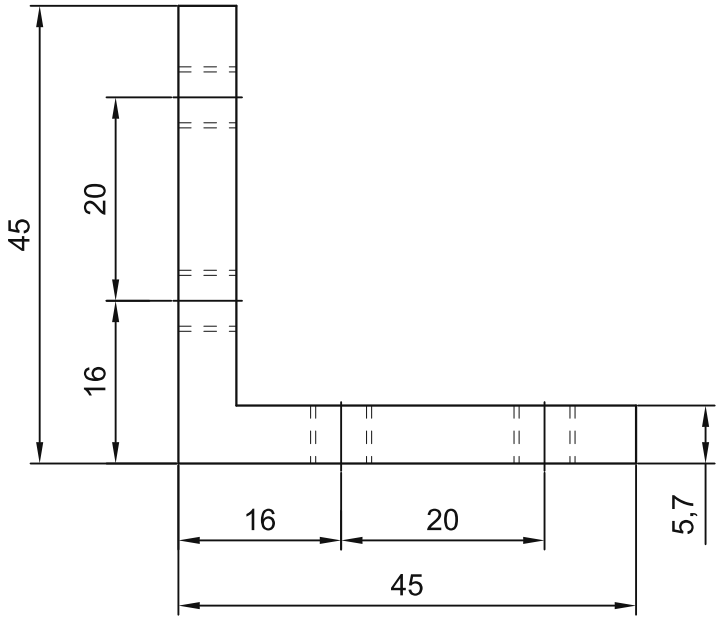

TECHNICAL NOTES:
1. Applicable tolerance standard: GB/T1804-2000, class M.
2. Remove burrs and break sharp edges. No scratches, impact damage or spots on the surface.
3. Sandblast and anodize the surface. Threads must run freely; cut faces and machined holes are not anodized.

sinsdar

L-SHAPE EXTRUDED INTERIOR CORNER BRACKETS

DRAWING / PART NUMBER
XADM01-G408-K14

MATERIAL: A6063-T5

UNIT: mm SCALE: see dimensions SHEET: 1 / 1