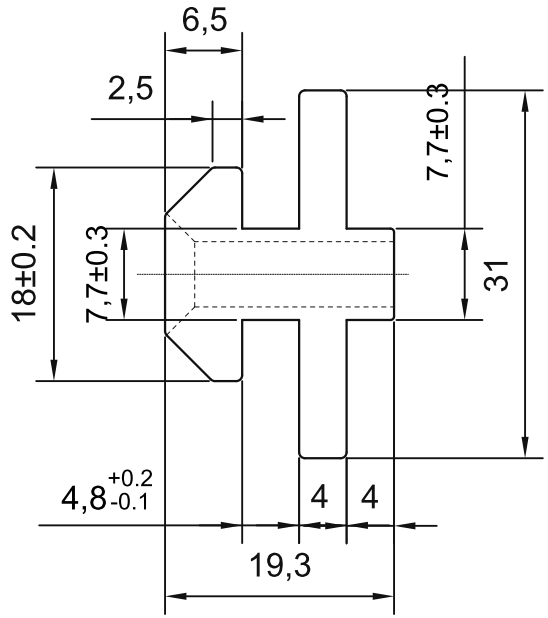

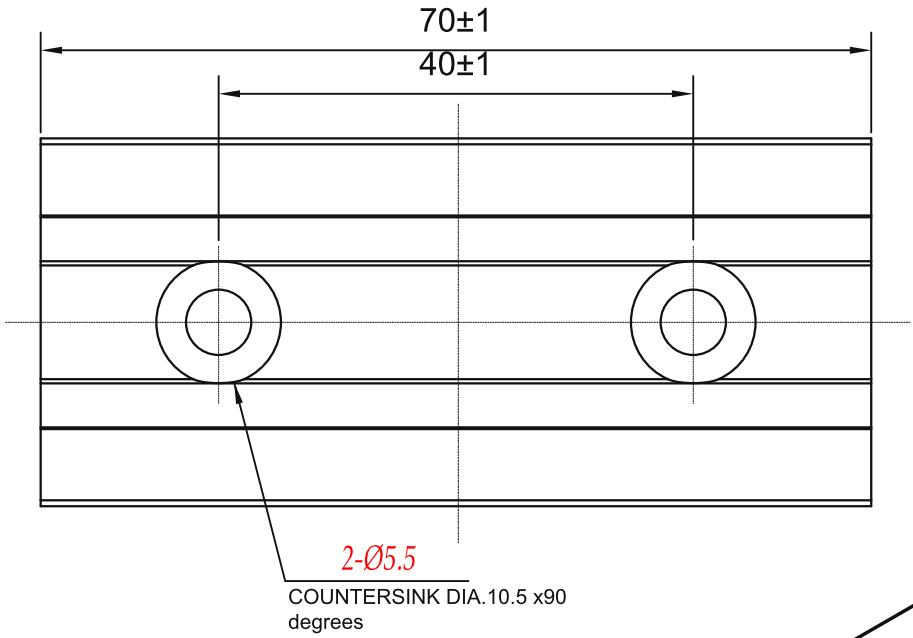



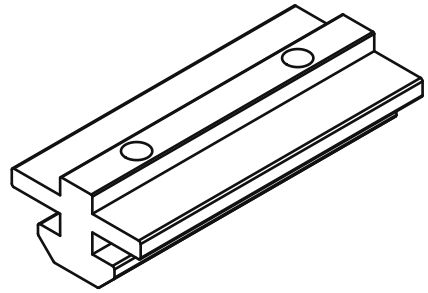

TECHNICAL NOTES:
1. Unspecified dimensional tolerances: GB/T1804-2000, class M.
2. Unspecified fillets: R0.3-0.5.
3. Break sharp edges; no burrs.
4. No surface scratches or impact damage.
5. Product mass: 19 g.

sinsdar

PROFILE SLIDE STRIPS

DRAWING / PART NUMBER
XAVF82-408-A

MATERIAL: HDPE

UNIT: mm SCALE: see dimensions SHEET: 1 / 1