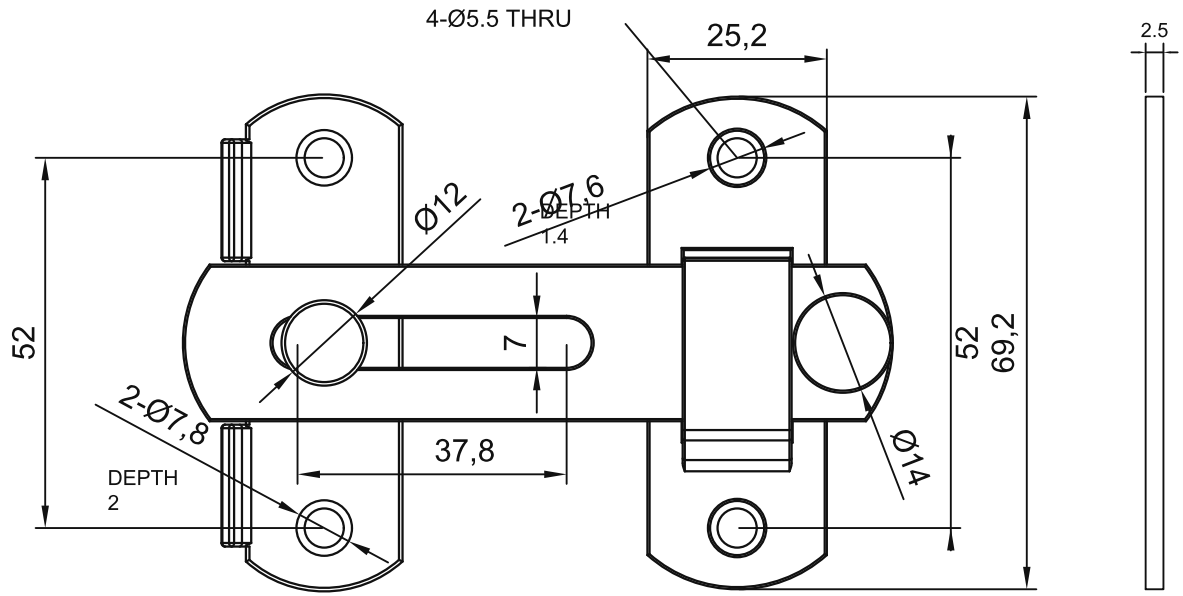

TECHNICAL NOTES:
1. Official target dimensions shown in mm.
2. Surface finish: Single-side brushed.
3. Verify the panel cutout and mating fasteners before assembly.

sinsdar

STAINLESS DOOR LATCHES

DRAWING / PART NUMBER

XAVL31-30

MATERIAL: SUS304

UNIT: mm SCALE: see dimensions SHEET: 1 / 1