NOTE: slider material ABS.
Hook material: carbon steel.

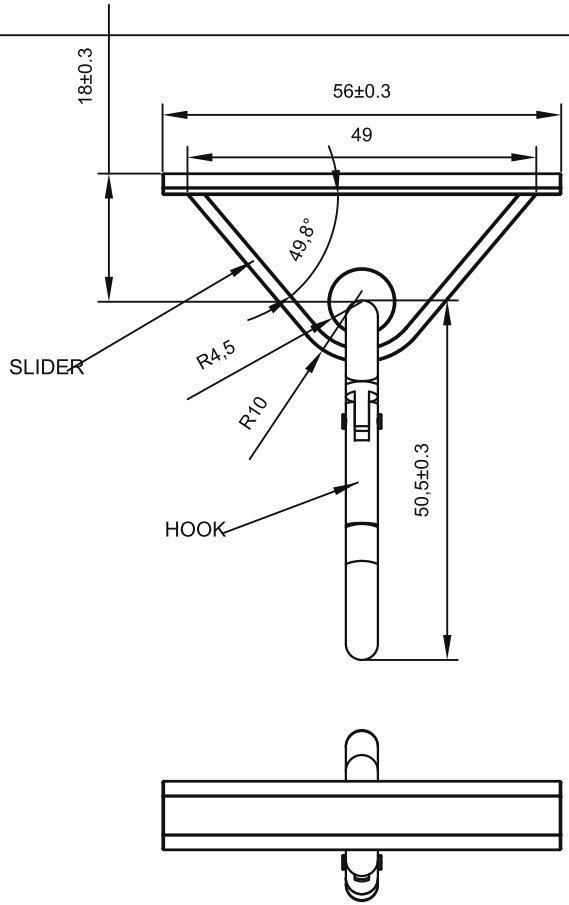

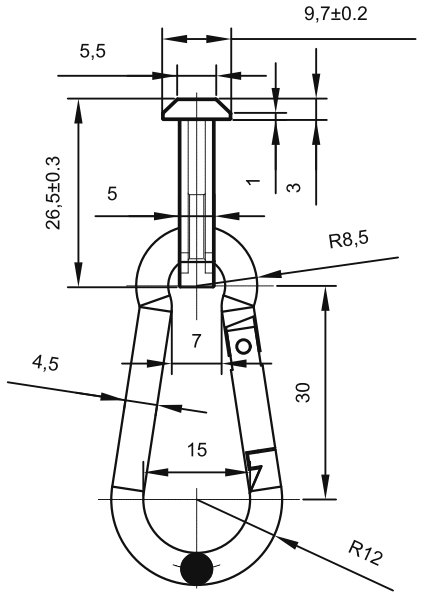



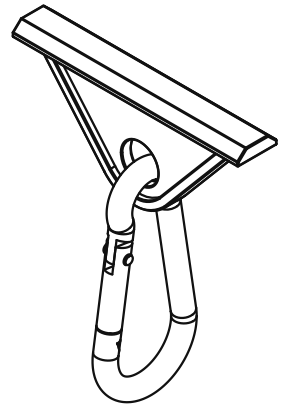

TECHNICAL NOTES:
1. Unspecified dimensional tolerances: GB/T1804-2000, class M.
2. Unspecified fillets: R0.2.
3. No surface burrs, incomplete mould filling, deformation or other defects.
4. Zinc-plate the hook.

6. Source-stated product mass18 g and load300 N.

sinsdar

PROFILE TOOL HANGERS

DRAWING / PART NUMBER
XARY92-G306

MATERIAL: ABS/carbon steel
UNIT: mm SCALE: see dimensions SHEET: 1 / 1