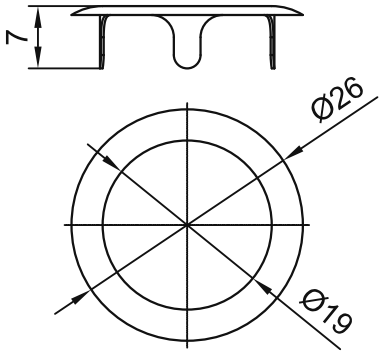

ACCESSORY

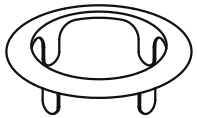

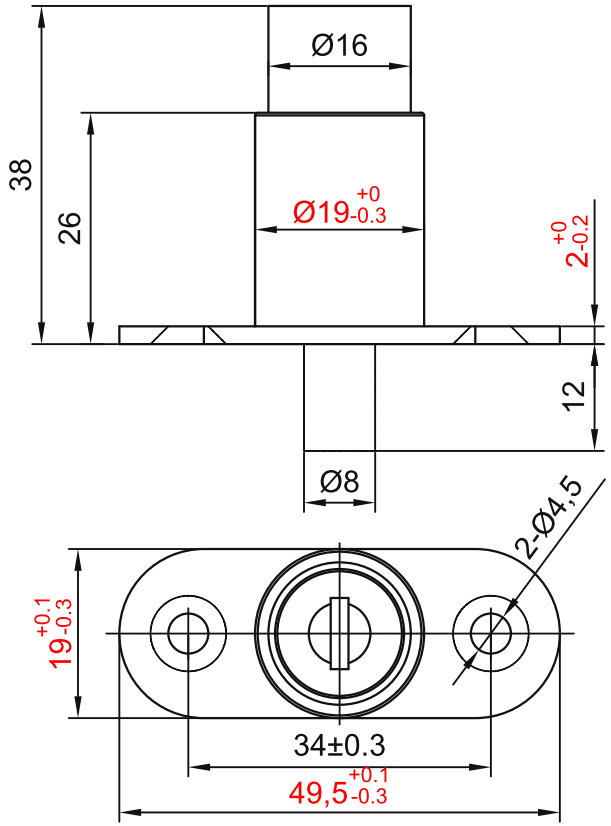

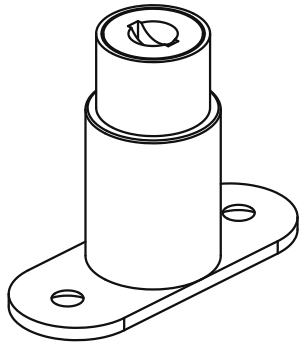

OTHER 3.2

TECHNICAL NOTES:
1. Unspecified dimensional tolerances: IT10.
2. Round sharp edges R0.5; threaded-hole chamfers C0.5.
3. Chrome-plate the surface; no obvious scratches or burrs.
4. Flat-head screws must not protrude above the countersink surface.
5. Supply two keys.

sinsdar

PROFILE DOOR LOCKS

DRAWING / PART NUMBER
XAKN43-T25

MATERIAL: S45C

UNIT: mm SCALE: see dimensions SHEET: 1 / 1