FRONT: nominal eye/base interfaces

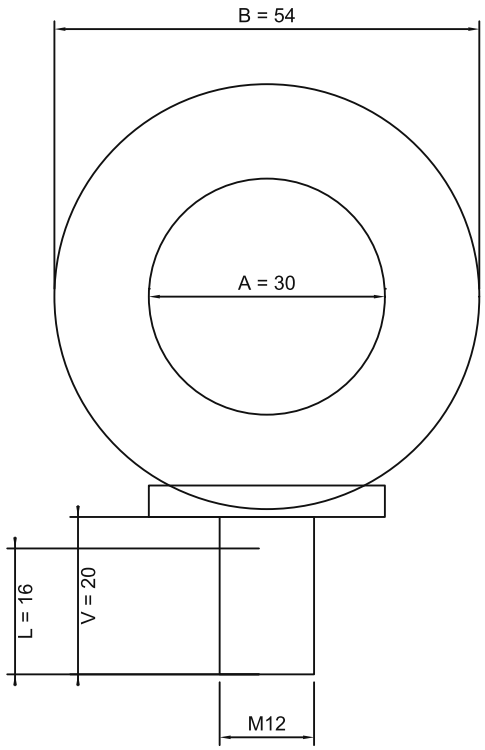

SIDE: nominal envelopes

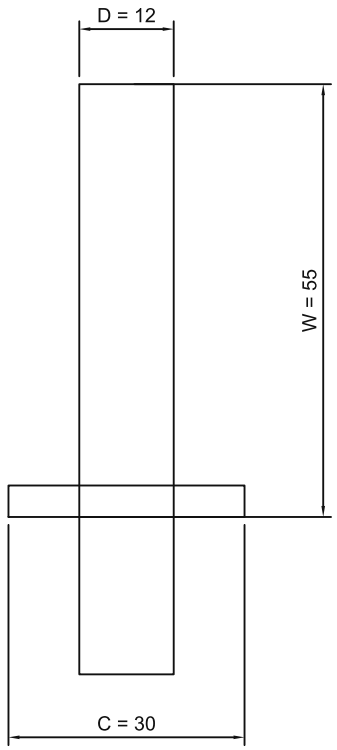

SELECTION DRAWING - NOT FOR MANUFACTURE
Eye/base blend, forging profile, thread tolerances and load rating are not specified here.
Use the listed interface dimensions to review assembly fit; no certified lifting rating is stated.
Finish: zinc plated. Reference: official ATH21 catalogue, page 1.

sinsdar

EYE BOLT - SELECTION DRAWING

DRAWING / PART NUMBER
XATH21-M12

MATERIAL: Carbon steel
UNIT: mm SCALE: see dimensions SHEET: 1 / 1