



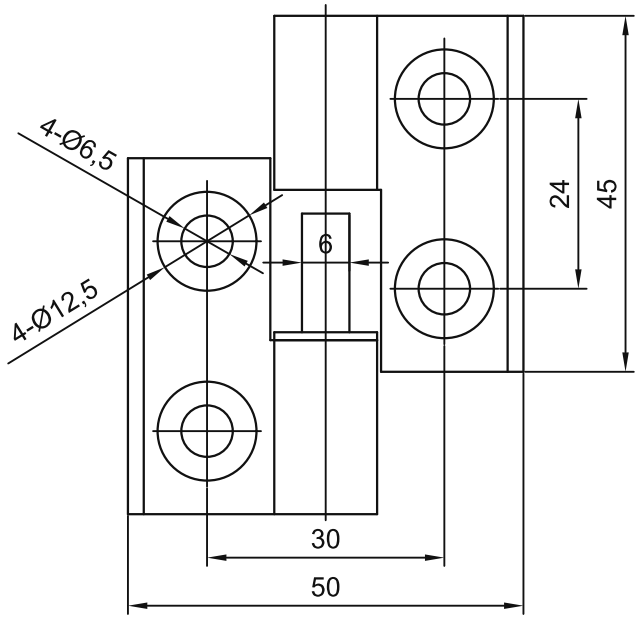

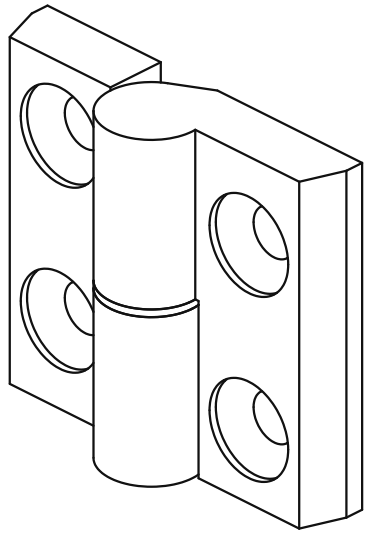

TECHNICAL NOTES:
1. Unspecified dimensional tolerances: +/-0.5 mm.
2. Smooth rotation without wobble.
3. No obvious surface scratches or damage.

sinsdar

NYLON LIFT-OFF HINGES

DRAWING / PART NUMBER
XAKQ52-B-Z-L-3030

MATERIAL: PA (black)
UNIT: mm SCALE: see dimensions SHEET: 1 / 1