MATING PROFILE
AOB02-H8840R

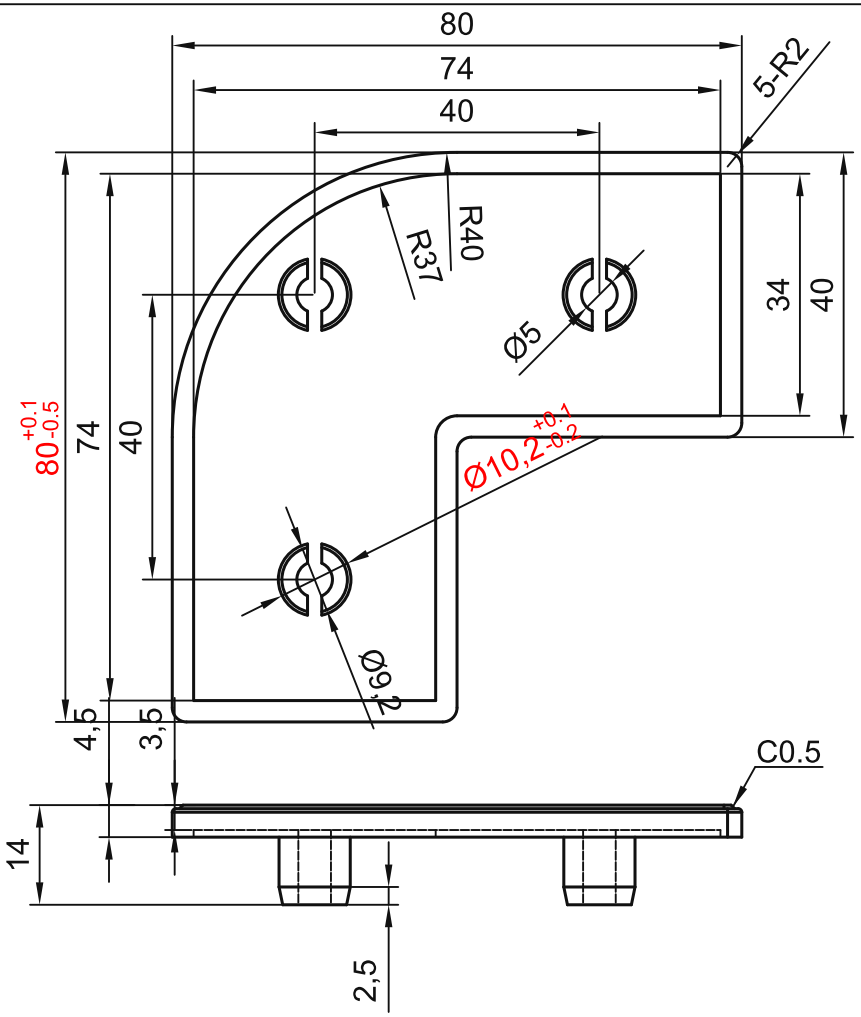

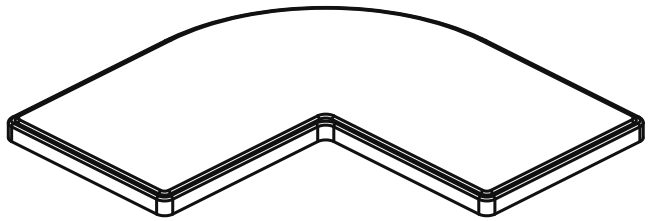

3.2
OTHER

TECHNICAL NOTES:
1. Unspecified tolerances: IT12.
2. Unspecified fillets/chamfers: R/C0.5.
3. Remove burrs; no shrinkage or flow marks.

sinsdar

PLASTIC END CAPS

DRAWING / PART NUMBER
XARC51-4010-H8840R / XARC52-4010-H8840R

MATERIAL: PA (51: light grey; 52: black)
UNIT: mm SCALE: see dimensions SHEET: 1 / 1