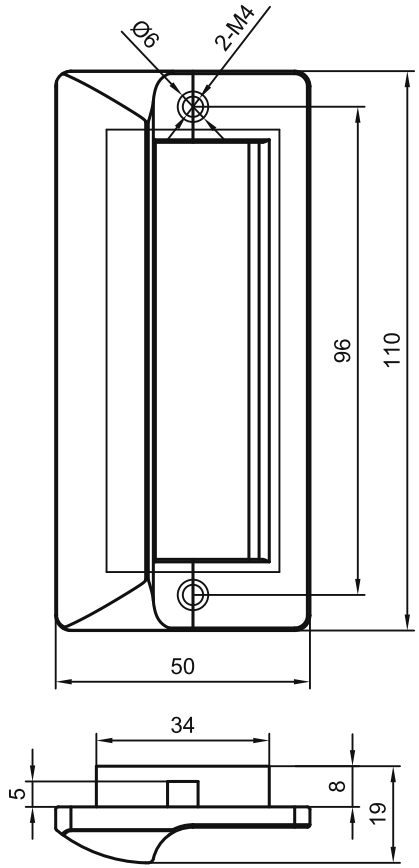

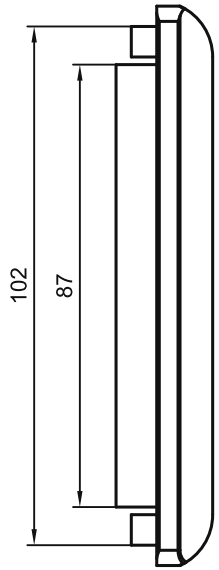

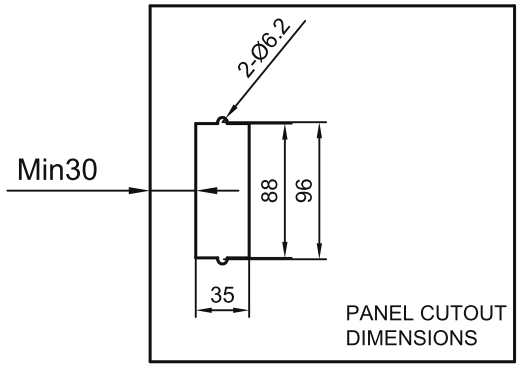

TECHNICAL NOTES:
1. Official target dimensions shown in mm.
2. Surface finish: Chrome plated.
3. Verify the panel cutout and mating fasteners before assembly.

sinsdar

FLUSH PULL HANDLES

DRAWING / PART NUMBER
XAKJ13

MATERIAL: Zinc alloy
UNIT: mm SCALE: see dimensions SHEET: 1 / 1