3.2
OTHER

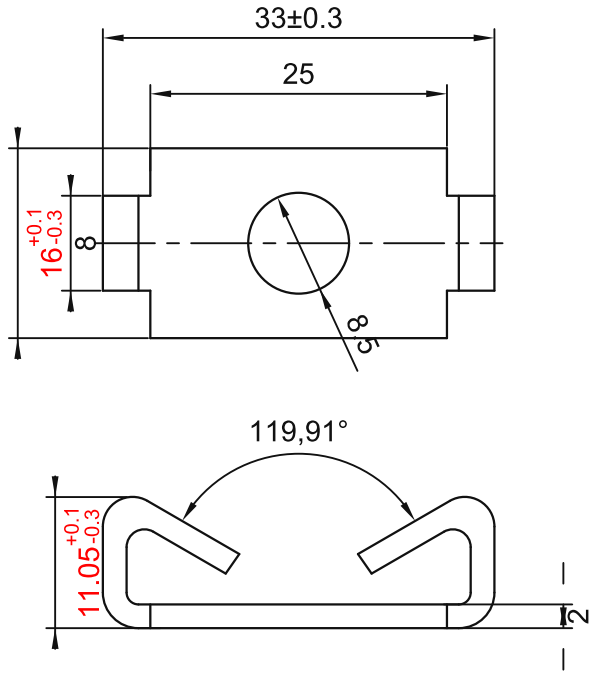

TECHNICAL NOTES:
1. Unspecified tolerances: IT10.
2. Nickel-plate the surface.
3. Remove burrs. Round all sharp edges R0.3.

sinsdar

ELASTIC END CONNECTORS

DRAWING / PART NUMBER
XADB22-408

MATERIAL: Carbon steel
UNIT: mm SCALE: see dimensions SHEET: 1 / 1